ROCKFORD BOARD OF EDUCATION
INVITATION FOR BID ON SUPPLIES, MATERIALS, EQUIPMENT OR SERVICES FOR SCHOOL DISTRICT NO. 205 ROCKFORD, ILLINOIS

IFB No. **22-32 Guilford H.S. HVAC Upgrades**

DATE: March 18, 2022

RE: **ADDENDUM NO. 1**

To All Bidders:

Included are modifications, clarifications and/or corrections for the Project Manual and are hereby made a part of the contract documents. Please attach this addendum to the Project Manual(s) in your possession. Please note the receipt of this addendum on the bid form. Bidders shall review changes to all portions of this work as changes to one portion may affect the work of another.

If you plan to hand deliver your IFB submission on the due date, please note you must check in on the 1st floor prior to coming to the bid opening. Please allow time for this as late submission will not be accepted.

Refer all questions relative to the business aspect, Instructions to Bidders, Special Conditions, and questions concerning the technical aspect of the documents to the Director of Purchasing by email at purchasingdeptstaff@rps205.com.

ROCKFORD BOARD OF EDUCATION

By: Dane Youngblood
Director of Purchasing

KEITH Engineering Design

Addendum # : 001

DATE ISSUED : March 17, 2022

ADDENDUM

Attention : Prospective Bidder

Subject : Addendum No. 1
The Bid Documents For:
RPS IFB # 22-32
Guilford HS HVAC Upgrade
Rockford, Illinois

General Notes and Clarifications

1. Pre-bid meeting sign-in attendance sheet is attached to this addendum.
2. Notes from Pre-Bid Meeting – 03/11/2022:
   a. Final date for contractors RFI's is revised to 03/25/2022.
   b. Final addendum to be issued is revised to 03/29/2022.
   c. Bid opening date is revised to 04/05/2022.
   d. Contractors to contact Rockford Public Schools to conduct additional site surveys on an as-needed basis.
   e. Background checks are required for all workers onsite.
   f. A walkthrough of the school was facilitated by RPS, IFS and KED.
3. **QUESTION:** Prefabricated Roof Specialties – Manufacturer Clarification
   a. In section 07 7100- Prefabricated Roof Specialties in subsection: 2.1.B.5.b (page 2 of the 07 7100 specification). In this section, you call out for the OMG Roofing Products: Permasnap. Within the past year or so, OMG Coping Products was re-purchased by Hickman Metal Edge Systems company. Products are the same, only the name has changed…I did not see a standard substitution request form otherwise I would have submitted that document.I did want to make sure this name change would not affect the prefabricated metal edge product selection. I have attached the technical data sheet for the Hickman Metal Edge Permasnap product for your review and comment.
   b. **ANSWER:** Hickman Edge Systesm PermaSnap & PermaSnap Plus can be used. See attached.

Specifications

4. Specification - 23 0993.11.51 – Sequence of Operations for HVAC DDC
   a. MODIFY Section 1.13 – ROOF TOP UNIT RTU-1H
      1) MODIFY section to include both RTU-1H and RTU-1E under this section

Drawings

5. Drawing – A12E - SECOND FLOOR PLAN – AREA E

1) ADD sheet A12E IN ITS ENTIRETY.

6. Drawing – S1.02 – FIRST FLOOR FRAMING PLAN

1) ADD Detail Callouts
2) REVISE Structural Steel Member Sizes

7. Drawing – S1.03 – PENTHOUSE ROOF FRAMING PLAN AND GENERAL NOTES

1) ADD Detail Callouts.

8. Drawing – S1.04 – ROOF TOP UNIT FRAMING PLAN

1) ADD Partial Field House Roof Plan
2) REVISE location of RTU

9. Drawing – S1.05 – GENERAL NOTES AND REINFORCING DETAILS

1) ADD Reinforcing Details
2) REVISE Reinforcing Details

10. Drawing – S1.06 – PENTHOUSE FLOOR SECTIONS AND DETAILS

1) ADD Structural Details.
2) REVISE Reinforcing Details.

11. Drawing – S1.07 – PENTHOUSE ROOF SECTIONS AND DETAILS

1) REVISE Structural Detail.

12. Drawing – S1.08 – SECTIONS AND DETAILS

1) ADD Structural Sections and Details Sheet.

13. Drawing – HD11H – First Floor Plan – Heating Demo

1) ADD existing vacuum pump to mechanical room to be demolished under alternate bid #1.

14. Drawing – HD11K – First Floor Plan – Heating Demo

1) ADD demo of HWP-1X, HWP-2X, HX-1X, HX-2X, and associated keyed notes under alternate bid #1.
2) Finned Tube Radiators previously shown in classrooms 167, 169 and 172 on the bid documents have been removed from drawings. These units were mistaken for the current hot water pipe enclosures. The hot water supply/return piping in this area was modified to show the existing conditions.

15. Drawing – H01C.A – Basement Plan – Heating New Work – Area C Alternate Bid #2

1) ADD HWS/R pipe sizing
2) ADD / placed keyed notes
3) ADD RHC-A2 and associated HWS/R piping.

16. Drawing – H11A.A – First Floor Plan – Heating New Work – Area A Alternate Bid #3

1) ADD keyed notes 1 & 2 to define piping details for RHC

17. Drawing – H11B.A – First Floor Plan – Heating New Work – Area B Alternate Bid #3

1) ADD keyed notes 1 & 2 to define piping details for RHC

18. Drawing – H11C – First Floor Plan – Heating New Work – Area C

1) ADD CHWS/R pipe sizing

19. Drawing – H11C.A – First Floor Plan – Heating New Work – Area C Alternate Bid #1

1) ADD CHWS/R pipe sizing.
2) ADD / placed keyed notes

20. Drawing – H11D – First Floor Plan – Heating New Work – Area D

1) ADD CHWS/R pipe sizing.

21. Drawing – H11D.A – First Floor Plan – Heating New Work – Area D Alternate Bid #1

1) MODIFY CHWS/R pipe sizing.
2) ADD detail to drip trap assembly keynote 7.
3) ADD / placed keyed notes

22. Drawings – H11E – First Floor Plan – Heating New Work – Area E

1) ADD VAV-G100 and all associated plumbing to HWS/R as indicated on drawings.
2) ADD Thermostat to VAV-G100 and existing FT-X.
3) ADD HWS/R to second floor VAVs see H12E for continuation.
4) ADD keyed note for new VAV-G100.

23. Drawing – H11E.A – First Floor Plan – Heating New Work – Area E Alternate Bid #1

1) ADD VAV-G100 and all associated plumbing to HWS/R as indicated on drawings.
2) ADD Thermostat to VAV-G100 and FT-G100
3) ADD HWS/R to second floor VAVs see H12E.A for continuation.
4) ADD / placed keyed notes

24. Drawing – H11F – First Floor Plan – Heating New Work – Area F

1) ADD / Modified CHWS/R pipe sizing.

25. Drawing – H11F.A – First Floor Plan – Heating New Work – Area F Alternate Bid #1

1) ADD / Modified CHWS/R pipe sizing.
2) ADD HWS/R to UV-147A / UV-147B and pipe sizing.
3) ADD / placed keyed notes

26. Drawing – H11G.A – First Floor Plan – Heating New Work – Area G Alternate Bid #1

1) ADD / Modified HWS/R & CHWS/R pipe sizing.
2) ADD / placed keyed notes

27. Drawing – H11H.A – First Floor Plan – Heating New Work – Area H Alternate Bid #1

1) ADD / Modified HWS/R & CHWS/R pipe sizing.
2) ADD / placed keyed notes

28. Drawing – H11I – First Floor Plan – Heating New Work – Area I

1) ADD CHWS/R pipe sizing.
2) ADD new HWS/R pipe rise to feed AHU-1E HWS/R in penthouse above.
3) ADD keynote 5 and 6 to differentiate VAV piping for 2 and 3-way valves.

29. Drawing – H11I.A – First Floor Plan – Heating New Work – Area I Alternate Bid #1

1) ADD new HWS/R pipe rise to feed AHU-1E HWS/R in penthouse above.
2) ADD / Modified HWS/R & CHWS/R pipe sizing
3) ADD / placed keyed notes

30. Drawing – H11J – First Floor Plan – Heating New Work – Area J

1) ADD / Modified CHWS/R pipe sizing.
2) ADD VAV-105.1, VAV-102, and associated thermostats in band office and dark room (keyed note 5).

31. Drawing – H11J.A – First Floor Plan – Heating New Work – Area J Alternate Bid #1

1) ADD / Modified HWS/R & CHWS/R pipe sizing
2) ADD VAV-105.1, VAV-102, and associated thermostats in band office and dark room (keyed note 7).
3) ADD / placed keyed notes

32. Drawing – H11K – First Floor Plan – Heating New Work – Area K

1) ADD CHWS/R pipe sizing.
2) ADD new piping enclosure to hide existing HWS/R and CHWS/R (keyed note 6)
3) ADD HWS/R piping to new FCU-172.1.

33. Drawing – H11K.A – First Floor Plan – Heating New Work – Area K Alternate Bid #1

1) ADD CHWS/R pipe sizing.
2) ADD new equipment HWP-1, HWP-2, HX-1, HX-2 and associated keyed notes 9 & 10.
3) ADD 1” drain pipe to AHU-3D & AHU-3E
4) ADD / placed keyed notes

34. Drawing – H12E – Second Floor Plan – Heating New Work – Area E

1) ADD VAV-247, VAV-246, and VAV-245 and all associated HWS/R pipping from floor below.
2) REMOVE FCU-247, FCU-245 and associated HWS/R and CHWR/S pipping.

3) REPLACE keyed notes 1, 2, 3, & 4 associated with FCU-247, FCU-245 and new cooling coils not present in area E.

4) ADD keyed notes for new equipment.

5) MODIFY Thermostats to connect to VAV-247, VAV-246, and VAV-245 and FTR-X as indicated on drawings.

6) ADD differential pressure sensor on CHWS/R lines as indicated on drawings.

7) ADD outline and keyed notes for RTU-1E on roof above.

35. Drawing – H12E.A – Second Floor Plan – Heating New Work – Area E Alternate Bid #1

1) ADD VAV-247, VAV-246, and VAV-245 and all associated HWS/R pipping.

2) REMOVE FCU-247, FCU-245 and associated HWS/R and CHWR/S pipping.

3) REPLACE keyed notes 1, 2, 3, & 4 associated with FCU-247, FCU-245 and new cooling coils not present in area E.

4) ADD keyed notes for new equipment.

5) Thermostats to connect to VAV-247, VAV-246, and VAV-245 and FT-246 as indicated on drawings.

6) ADD differential pressure sensor on CHWS/R & HWS/R lines as indicated on drawings.

7) ADD outline and keyed notes for RTU-1E on roof above.

36. Drawing – H12H – Second Floor Plan – Heating New Work Area H

1) ADD keyed notes 5 and 6.

37. Drawing – H12H.A – Second Floor Plan – Heating New Work Area H – Alternate Bid #1

1) ADD keynotes 5, 6, and 7.

2) ADD / placed keyed notes

38. Drawing – H12J – Second Floor Plan – Heating New Work Area J

1) ADD keyed notes 5 & 6 for AHU-2B, AHU-2C.

39. Drawing – H12J.A – Second Floor Plan – Heating New Work Area J – Alternate Bid #1

1) OMIT keyed note 3.

2) ADD keyed notes for AHU-2B, AHU-2C.

3) ADD keyed notes 5- 9 / placed existing keyed notes.

40. Drawing – H13I – Enlarged Penthouse Plan – Heating New Work

1) OMIT all references to concrete pad associated with AHU-1E. Concrete pad not required.

2) MODIFY unit heaters located in penthouse (currently labeled UH-1) to be UH-9 and UH-10. See Unit Heater Schedule on H504 – Heating Schedules.

41. Drawing – H400 – Heating Details

1) MODIFIY AHU-1A detail to show Face and Bypass.

42. Drawing – H401 – Heating Details

1) MODIFIY detail 1 to say "AHU-3D".

43. Drawing – H402 – Heating Details

1) ADD 3-way valves to stacked AHU detail 5.
2) ADD chilled water flow meter to details 4 and 8.

44. Drawing – H403 – Heating Details

1) ADD detail 9 for PDU-1

45. Drawing – H500 – Heating Schedules

1) ROOF TOP UNIT SCHEDULE
   (a) ADD RTU-1E to schedule. See attached for details.

46. Drawing – H502 – Heating Schedules

1) NEW UNIT VENTILATOR SCHEDULE
   (a) UPDATE UV-113, UV-167, UV-169A, UV-170, UV-169B, UV-171, UV-172, UV-110, UV-173 to be Daikin Model UAVV9S15 and updated specifications.

47. Drawing – H504 – Heating Schedules

1) UNIT HEATER SCHEDULE
   (a) ADD UH-9 and UH-10 with the same equipment selection and specs as UH-8.

48. Drawing – V11E – First Floor Plan – Ventilating New Work – Area E

1) ADD keyed notes 1-3.
2) ADD VAV-G100 and all associated ductwork and grilles/diffusers as indicated.

49. Drawing – V11H – First Floor Plan – Ventilating New Work – Area H

1) ADD keyed notes 1-3.
2) ADD new fire dampers and keyed note.

50. Drawing – V11I – First Floor Plan – Ventilating New Work – Area I

1) ADD new fire dampers and keyed note.

51. Drawing – V11J – First Floor Plan – Ventilating New Work – Area J

1) ADD relief air transfer duct between rooms 110 and 112.
2) ADD keyed note 2 for new UV installation.
3) ADD new fire dampers and keyed note.

52. Drawing – V12E – Second Floor Plan – Ventilating New Work – Area E

1) REMOVE FCU-245 and FCU-247.
2) ADD RTU-1E. Furnish and install new roof-top unit per manufacturer's installation instructions.

3) ADD VAV-245, 246, 247 and all associated ductwork and grilles/diffusers as indicated on drawings.

4) DEMOLISH and cap existing supply air duct from gymnasium air-handing unit at the wall of the aerobics room.

5) ADD Fire dampers and keyed notes to vents going to floor below.

53. Drawing – V12H – Second Floor Plan – Ventilating New Work – Area H

1) ADD fire dampers and keyed notes to ductwork going to floor below.

2) ADD fire dampers for fire rated wall penetrations.

54. Drawing – V12J – Second Floor Plan – Ventilating New Work – Area J

1) ADD Fire dampers and keyed notes to vents going to floor below.

55. Drawing – V500 – Ventilating Schedules

1) VAV TERMINAL UNIT SCHEDULE

(a) ADD VAV-G100, VAV-245, VAV-246 and VAV-247 to schedule. See attached for details.

56. Drawing – V501 – Ventilating Schedules

1) GRILLE AND DIFFUSER SCHEDULE

(a) ADD SG-5, RG-12, and RG-13.

57. Drawing ED11C – First Floor Plan – Electrical Demolition – Area C

1) In Alternate Bid 2 Pool area: Change keyed note 4 to keyed note 8 for Spectator area speakers.

2) Keyed Electrical Notes: Add keyed note 8 as follows: “UNDER ALTERNATE BID 2; REMOVE EXISTING CEILING SPEAKER IN COORDINATION WITH CEILING REMOVAL. PROTECT FOR REINSTALLATION AS SUSPENDED SPEAKER. SEE REVISED ELECTRICAL PLANS FOR REINSTALLATION LOCATIONS.”

58. Drawing ED11H – First Floor Plan – Electrical Demolition – Area C

a. In Equipment room, east of main entrance lobby: Under Alternate Bid 1: Include disconnection of duplex condensate pumps, for removal by other trades, and demolition of associated electrical conduit, wiring, controls, etc., back to source.

59. Drawing ED11I – First Floor Plan – Electrical Demolition – Area I

a. In Kitchen Office: Add keyed note 1 for lighting removal.

b. In Kitchen Storage: Add keyed note 1 for lighting removal and keyed note 3 for heat detector removal.

c. In RR Spec. Ed. Toilet 158.1: Change UH-X to existing to remain.

60. Drawing ED11J – First Floor Plan – Electrical Demolition – Area J

a. At south Auditorium Corridor near Janitor A116: Delete lighting removal and associated ceiling work at stair to Auditorium.

b. At Girls 116 and Credit Union 104: Delete designation of work for Alt. Bid 1. There is base bid chilled water piping in these areas also.

c. Keyed notes: Revise keyed note 11 to read as follows: “EXISTING LIGHTING AND OTHER CEILING DEVICES SHALL BE REMOVED AND REINSTALLED, ONLY AS REQUIRED TO ALLOW CHILLED WATER PIPING INSTALLATION UNDER BASE BID AND HEATING SYSTEM PIPING REMOVAL UNDER ALTERNATE BID 1.”

61. Drawing ED12E – Second Floor Plan – Electrical Demolition – Area E

a. In Mechanical Mezzanine: Revise identification tags for existing electrical distribution equipment for clarity. See attached revised drawing ED12E.

62. Drawing ED13HK – Roof Floor Plan – Electrical Demolition – Areas H-K

a. Keyed notes:

1) Revise keyed note 1 to read: “DISCONNECT EXHAUST FAN ELECTRICALLY FOR REMOVAL AND REPLACEMENT BY OTHER TRADE. CIRCUIT SHALL REMAIN FOR RECONNECTION TO NEW EXHAUST FAN. REMOVE ASSOCIATED MOTOR CONTROLLER ON FLOOR BELOW FOR REPLACEMENT WITH NEW.”

2) Revise keyed note 2 to read: “DISCONNECT EXHAUST FAN ELECTRICALLY FOR REMOVAL BY OTHER TRADE. COMPLETELY REMOVE ASSOCIATED CIRCUIT WIRING BACK TO SOURCE OR CIRCUIT JUNCTION. REMOVE ASSOCIATED MOTOR CONTROLLER ON FLOOR BELOW.”

63. Drawing E11C – First Floor Plan – New Electrical – Area C

a. Revise Pool area lighting, controls, and keyed notes per attached revised sheet E11C.

64. Drawing E11E – First Floor Plan – New Electrical – Area E

a. In Concessions: Add remote indicator/test switch for each duct smoke detector for new RTU-1E.

65. Drawing E12E – Second Floor Plan – New Electrical – Area E

a. At upper Gym entrance lobby, add (2 each) duct smoke detectors in supply and return ducts from roof mounted RTU-1E.

66. Drawing E13AB – Roof Plan – New Electrical – Areas A & B

a. Add keyed note 1 at each new Fieldhouse ACCU.

b. Keyed Electrical Notes: Add keyed note 1 as follows: “PROVIDE ROOF PENETRATION BOOT FOR ACCU FEED CONDUIT ROUTE TO FIELDHOUSE BELOW. COMPLETELY SEAL WITH WEATHER AND UV RESISTANT SILICONE AT CONDUIT/BOOT INTERSECTION. COORDINATE WITH ROOFING TRADE.”

67. Drawing E13CF – Roof Plan – New Electrical – Areas C, D, E, & F

a. Keyed Electrical notes

1) Revise keyed note 1 to read: “CONNECT NEW FAN TO EXISTING 120V CIRCUIT FROM PREVIOUSLY REMOVED FAN. MOTOR CONTROLLER SHOWN FOR REFERENCE. NEW STARTER WILL PLACED AT SAME LOCATION AS PREVIOUSLY REMOVED CONTROLLER, ON FLOOR(S) BELOW. VERIFY EXACT LOCATION.”

2) Add keyed note 2 as follows: “CONNECT NEW FAN TO EXISTING 480V, 3Ø CIRCUIT FROM PREVIOUSLY REMOVED FAN. NEW MOTOR CONTROLLER SHOWN FOR REFERENCE. NEW

STARTER WILL BE PLACED AT SAME LOCATION AS PREVIOUSLY REMOVED CONTROLLER, ON FLOOR(S) BELOW. VERIFY EXACT LOCATION."

b. Roof Section 10: Add keyed note 2 for exhaust fan EF-110.

68. Roof Section 2: Add power connection for new RTU-1E. Route 3#8 and 1#10 ground in 3/4" conduit to new 35A/3P breaker in existing panel HDP-B, located in spaces 31, 33, and 35.

69. Drawing E500 – Electrical Luminaire & Material Schedules

a. Revise Luminaire schedule per attached revised sheet E500.

Attachments

- Specifications: None.
- Drawings:
  - A12E, S1.02, S1.03, S1.04, S1.05, S1.06, S1.07, S1.08, HD11H, HD11K, H01C.A, H11A.A, H11B.A, H11C, H11C.A, H11D, H11D.A, H11E, H11E.A, H11F, H11F.A, H11G.A, H11H.A, H11I, H11I.A, H11J, H11J.A, H11K, H11K.A, H12E, H12E.A, H12H, H12H.A, H12J, H12J.A, H400, H402, H403, H500, H502, H504, V11E, V11H, V11I, V11J, V12E, V12H, V12J, V500, V501, ED12E, E11C, E500
- Sign-In Sheet for Pre-Bid Meeting on 03/11/2022
- Hickman Edge System Permasnap & PermaSnap Plus Product Data

Grant Wood

Signature

Grant Wood
Mechanical Engineer
Printed Name & Title

NEW WORK KEYNOTES

1	WHERE PIPING OR DUCTWORK HAS BEEN ROUTED THROUGH A MASONRY WALL. INFILL HOLE TIGHT TO NEW PIPING OR NEW DUCTWORK WITH FULL CMU. MATCH THICKNESS AND COURSING - PROVIDE FIRE CAULK AROUND PENETRATION AND PAINT TO MATCH EXISTING ADJACENT SURFACE.
2	WHERE PIPING HAS BEEN ROUTED THROUGH CONCRETE PANEL. INFILL HOLE TIGHT TO NEW PIPING - PROVIDE FIRE CAULK AROUND PENETRATION AND PAINT TO MATCH EXISTING ADJACENT SURFACE.
3	WHERE PIPING HAS BEEN REMOVED, INFILL HOLE IN WALL WITH FULL CMU TO MATCH EXISTING SIZE, TEXTURE, AND COURSING. PAINT TO MATCH EXISTING ADJACENT SURFACE.
4	WHERE MECHANICAL EQUIPMENT IS BEING REPLACED. MODIFY OPENING AS REQUIRED TO ACCOMMODATE NEW MECHANICAL EQUIPMENT AND PIPING. INFILL HOLE WITH FULL CMU TO MATCH THICKNESS AND COURSING. PREP AND PAINT TO MATCH EXISTING ADJACENT SURFACE. REFER TO MECHANICAL DRAWINGS FOR ADDITIONAL INFORMATION.
5	WHERE MECHANICAL EQUIPMENT IS BEING REPLACED. PATCH, PREP AND PAINT NEWLY EXPOSED WALL SURFACE TO MATCH EXISTING ADJACENT SURFACE.

NEW WORK KEYNOTES

6	WHERE MECHANICAL EQUIPMENT HAS BEEN REMOVED. INFILL HOLE IN WALL WITH FULL CMU AND BRICK TO MATCH EXISTING SIZE AND COURSING. PAINT INTERIOR SURFACE TO MATCH EXISTING ADJACENT SURFACE.
7	WHERE PIPING OR DUCTWORK HAS BEEN ROUTED THROUGH A FRAMING WALL.INFILL HOLE TIGHT TO NEW PIPING OR NEW DUCTWORK - PROVIDE FIRE CAULK AROUND PENETRATION. PATCH, PREP, AND PAINT TO MATCH EXISTING ADJACENT SURFACE.
8	WHERE PIPING OR DUCTWORK HAS BEEN REMOVED. PATCH, PREP AND PAINT TO MATCH EXISTING ADJACENT SURFACE IN MATERIAL, TEXTURE, AND COLOR.
9	WHERE MECHANICAL EQUIPMENT IS BEING REMOVED. PATCH, PREP AND PAINT NEWLY EXPOSED WALL SURFACE TO MATCH EXISTING ADJACENT SURFACE.
13	AFTER WORK HAS BEEN PERFORMED; REINSTALL EXISTING ACOUSTIC CEILING TILES

LEGEND

DEMOLITION

NEW WORK

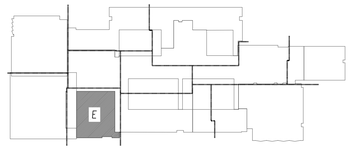

SECOND FLOOR KEY PLAN
NO TO SCALE

NORTH

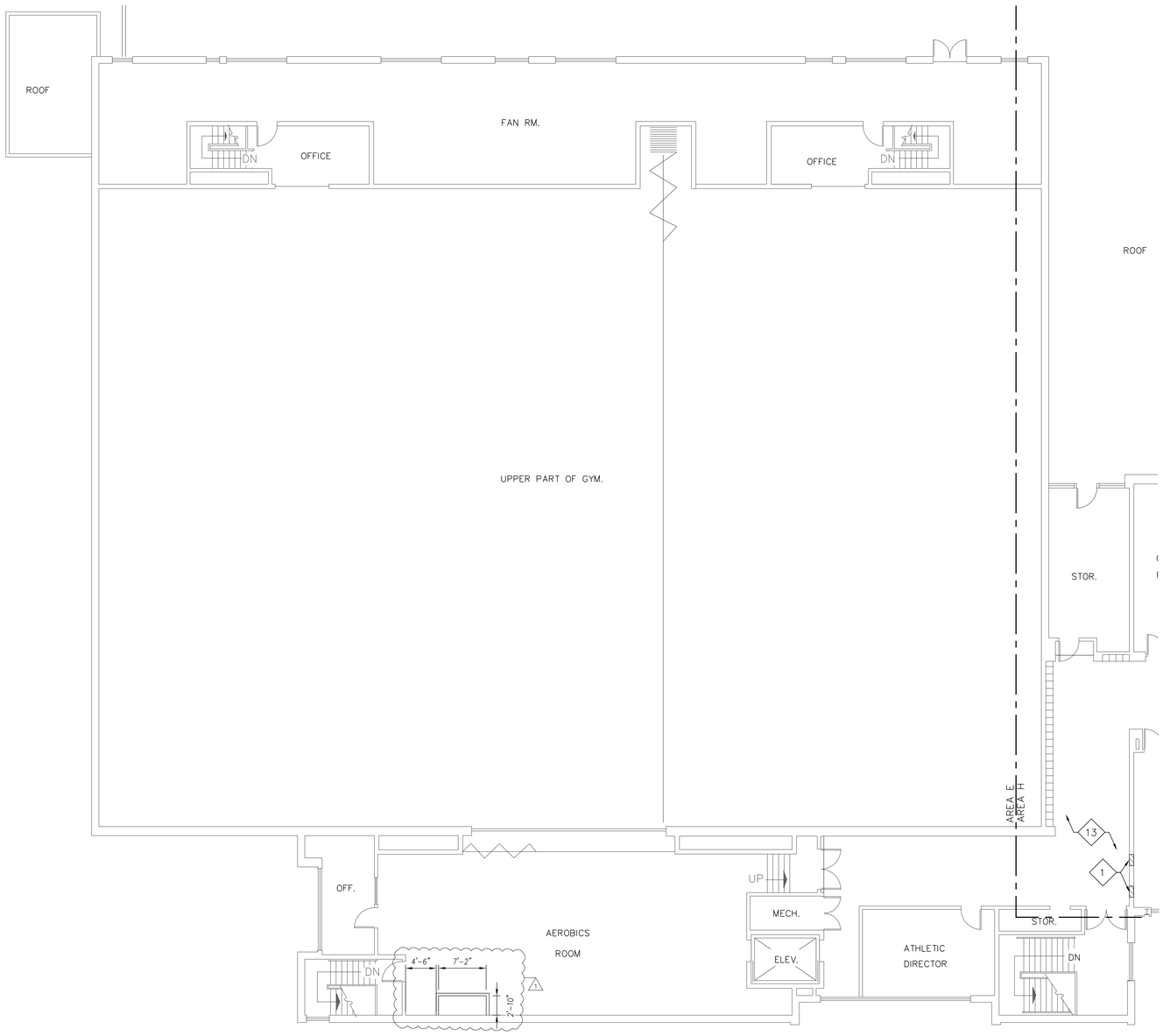

SECOND FLOOR PLAN - AREA E
1/8"= 1-0"

NORTH

Revisions

No.	Date	
1	03/15/2022	Addendum # 1

GUILFORD HIGH SCHOOL
HVAC UPGRADE
ROCKFORD, ILLINOIS

Sheet Title:
SECOND FLOOR PLAN
- AREA E

Proj. No.: 21012.40
Date: 01/18/2022
Drawn: MI
Approved: MS
Sheet No.: A12E 1

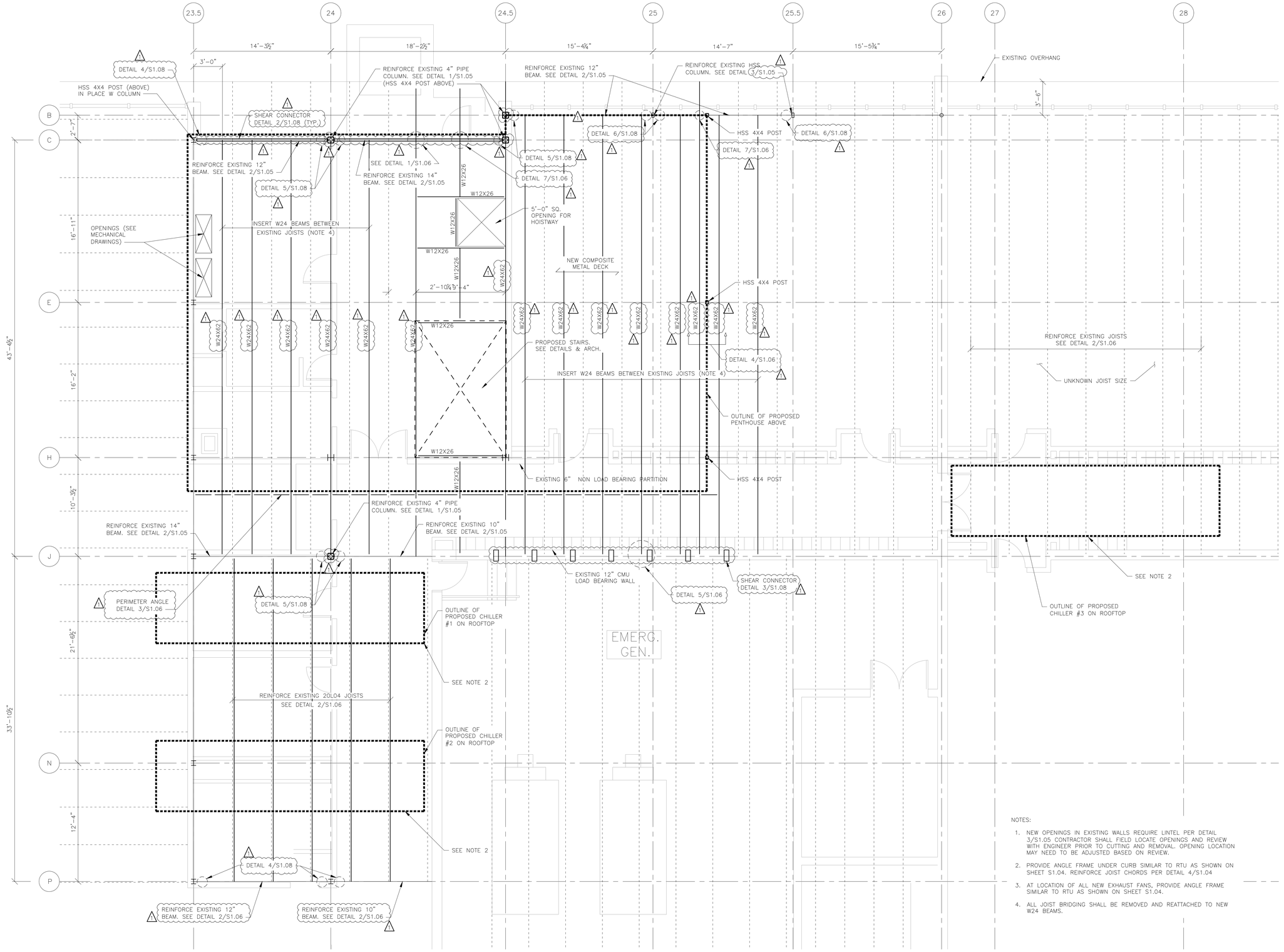

NOTES:

1. NEW OPENINGS IN EXISTING WALLS REQUIRE LINTEL PER DETAIL 3/S1.05 CONTRACTOR SHALL FIELD LOCATE OPENINGS AND REVIEW WITH ENGINEER PRIOR TO CUTTING AND REMOVAL. OPENING LOCATION MAY NEED TO BE ADJUSTED BASED ON REVIEW.
2. PROVIDE ANGLE FRAME UNDER CURB SIMILAR TO RTU AS SHOWN ON SHEET S1.04. REINFORCE JOIST CHORDS PER DETAIL 4/S1.04
3. AT LOCATION OF ALL NEW EXHAUST FANS, PROVIDE ANGLE FRAME SIMILAR TO RTU AS SHOWN ON SHEET S1.04.
4. ALL JOIST BRIDGING SHALL BE REMOVED AND REATTACHED TO NEW W24 BEAMS.

FIRST FLOOR FRAMING PLAN

DANIEL PATRICK CACERES 081-007646 STATE OF ILLINOIS

Daniel Caceres

EXPIRES 11/30/2022
02/21/2022

KEITH Engineering Design
www.keithmep.com
707 NE Jefferson Ave
Peoria, IL 61603
309 / 938-4005 - office
309 / 214-0063 - fax

ROCKFORD PUBLIC SCHOOLS

FEHR GRAHAM ENGINEERING & ENVIRONMENTAL
230 WOODLAWN AVENUE
AURORA, ILLINOIS 60506

Saavedra Group Architects
504 N CHURCH STREET
ROCKFORD, ILLINOIS 61103

Revisions

No.	Date	
1	3/4/22	ADDENDUM #1

GUILDFORD HIGH SCHOOL
HVAC UPGRADE
ROCKFORD, ILLINOIS

Sheet Title:
FIRST FLOOR FRAMING PLAN

Proj. No.:	21-825
Date:	2/21/2022
Drawn:	EJA
Approved:	DC
Sheet No.:	S1.02

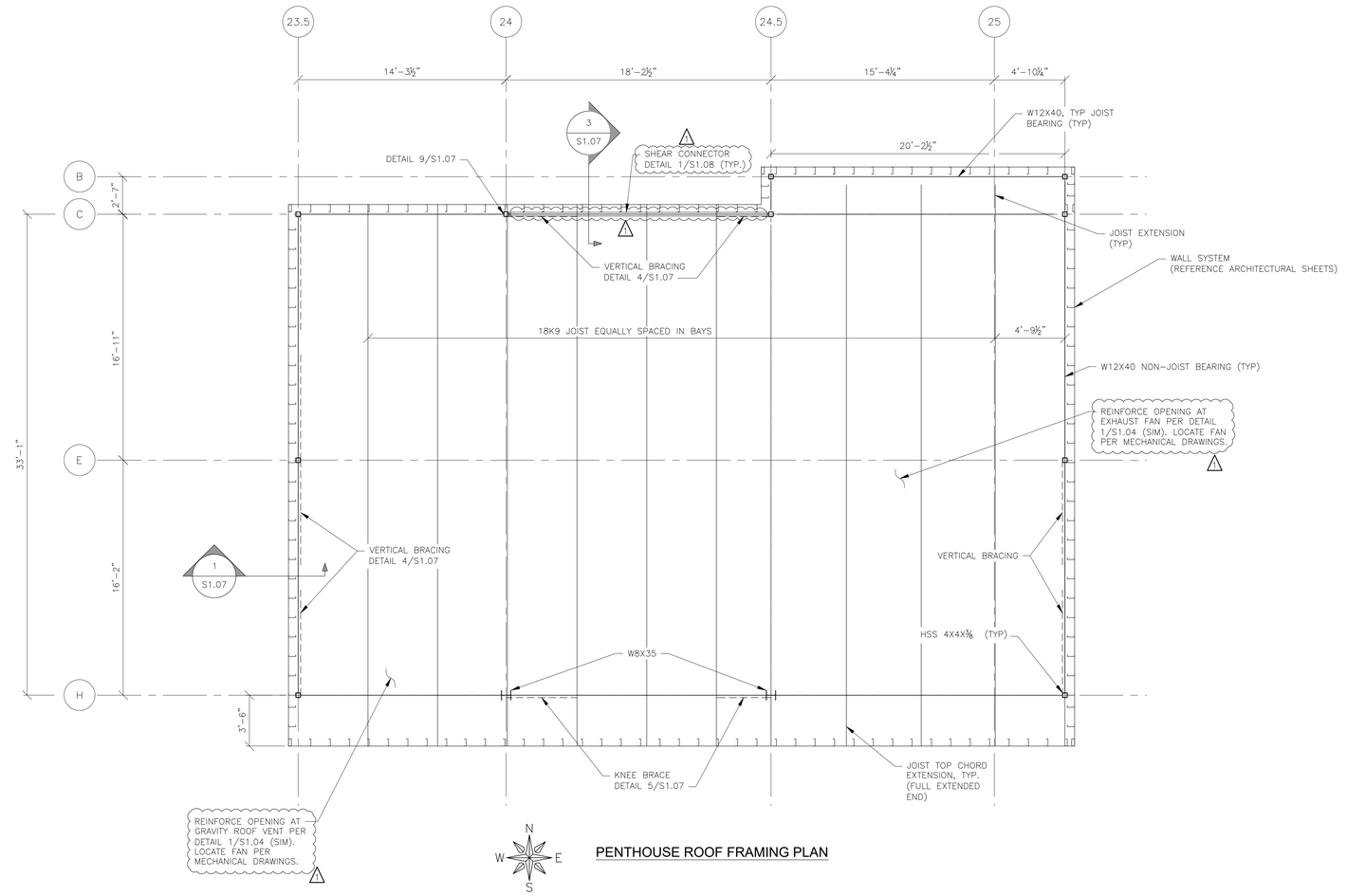

PENTHOUSE ROOF FRAMING PLAN

DANIEL PATRICK CACERES
081-007646
REGISTERED PROFESSIONAL ENGINEER
STATE OF ILLINOIS

EXPIRES 11/30/2022
02/21/2022

KEITH Engineering Design
www.keithmep.com
707 NE Jefferson Ave
Peoria, IL 61603
309 / 939-4005 : office
309 / 214-0063 : fax

ROCKFORD PUBLIC SCHOOLS
FEHR GRAHAM
ENGINEERING & ENVIRONMENTAL
230 WOODLAWN AVENUE
AURORA, ILLINOIS 60506
Saavedra Group Architects
504 N CHURCH STREET
ROCKFORD, ILLINOIS 61103

Revisions

No.	Date	Revisions
1	3/4/22	ADDENDUM #1

GUILDFORD HIGH SCHOOL
HVAC UPGRADE
ROCKFORD, ILLINOIS

Sheet Title:
PENTHOUSE ROOF FRAMING PLAN AND GENERAL NOTES

Proj. No.:	21-825
Date:	2/21/2022
Drawn:	EJA
Approved:	DC
Sheet No.:	S1.03

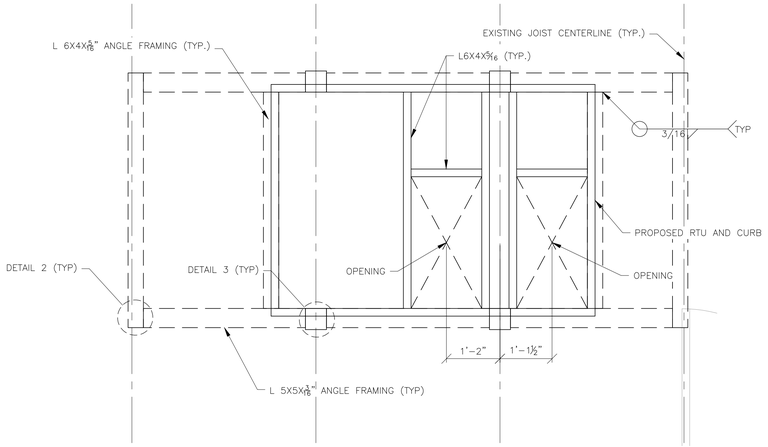

DETAIL 1- TYPICAL ENLARGED PLAN AT RTU
PROVIDE CUSTOM FRAMING AT EACH RTU

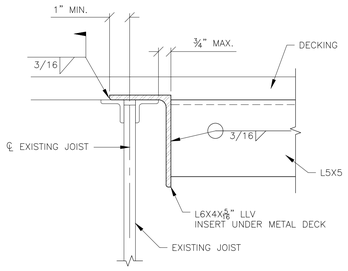

DETAIL 2 - END JOIST CONNECTION

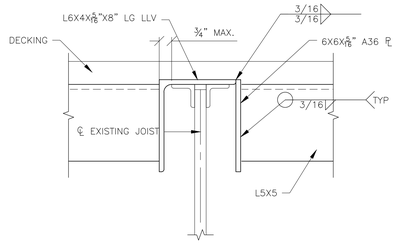

DETAIL 3 - MIDDLE JOINT CONNECTION

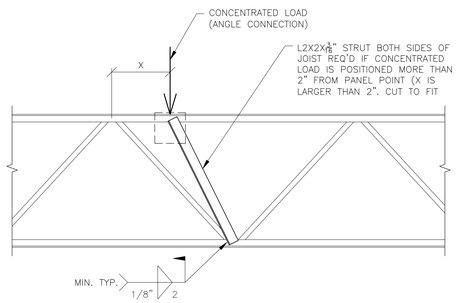

DETAIL 4 - JOIST CHORD REINFORCEMENT

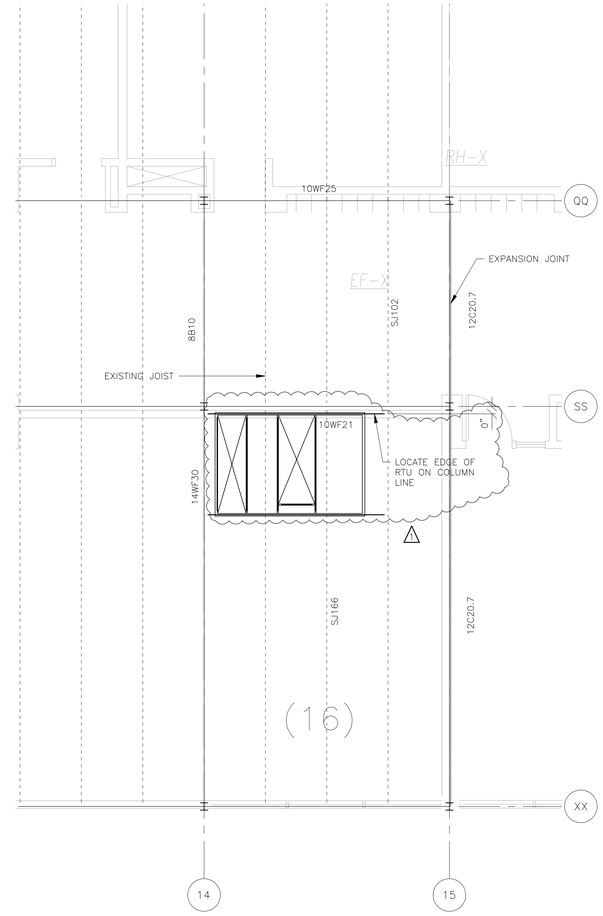

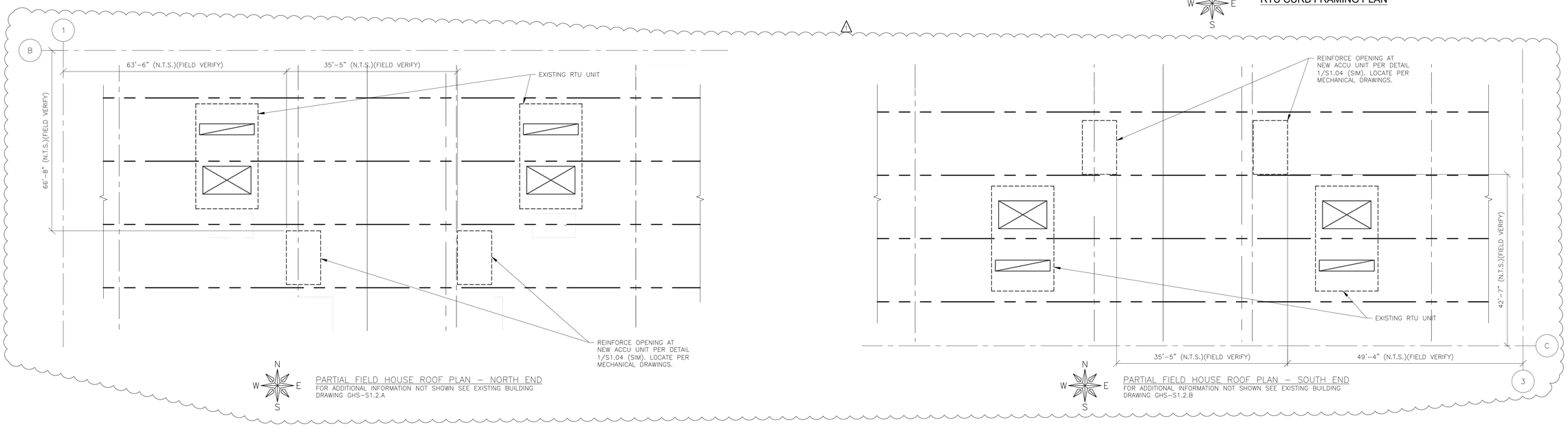

N W E S

PARTIAL FIELD HOUSE ROOF PLAN – NORTH END
FOR ADDITIONAL INFORMATION NOT SHOWN SEE EXISTING BUILDING DRAWING GHS-S1.2.A

N W E S

PARTIAL FIELD HOUSE ROOF PLAN – SOUTH END
FOR ADDITIONAL INFORMATION NOT SHOWN SEE EXISTING BUILDING DRAWING GHS-S1.2.B

N W E S

RTU CURB FRAMING PLAN

DANIEL PATRICK CACERES
081-007646
REGISTERED PROFESSIONAL ENGINEER
STATE OF ILLINOIS
EXPIRES 11/30/2022
02/21/2022

KEITH Engineering Design
www.kedmep.com
707 NE Jefferson Ave
Peoria, IL 61603
309 / 839-4005 : office
309 / 214-0063 : fax

FEHR GRAHAM
ENGINEERING & ENVIRONMENTAL
230 WOODLAWN AVENUE
AURORA, ILLINOIS 60506

Saavedra Group Architects
504 N CHURCH STREET
ROCKFORD, ILLINOIS 61103

ROCKFORD PUBLIC SCHOOLS

Revisions

No.	Date	
1	3/4/22	ADDENDUM #1

GUILDFORD HIGH SCHOOL
HVAC UPGRADE
ROCKFORD, ILLINOIS

Sheet Title:
ROOF TOP UNIT FRAMING PLAN

Proj. No.:	21-825
Date:	2/21/2022
Drawn:	EJA
Approved:	DC
Sheet No.:	S1.04

GENERAL NOTES

1. CONTRACTOR TO FIELD VERIFY ALL DIMENSIONS BEFORE FABRICATING ANY MATERIALS. IF DIMENSIONS ARE SUBSTANTIALLY DIFFERENT CONTACT ENGINEER BEFORE PROCEEDING WITH CONSTRUCTION. DIMENSIONS ARE BASED ON CAD DRAWINGS RECEIVED FROM THE OWNER.
2. ANY AREAS DAMAGED OR DESTROYED DURING THE PROJECT AS A DIRECT OR INDIRECT RESULT OF CONTRACTOR OPERATIONS, SHALL BE RESTORED TO THAT CONDITION OR BETTER WHICH EXISTED PRIOR TO STARTING CONSTRUCTION. THE COST OF SAID RESTORATION OR REPAIR SHALL BE BORNE TOTALLY BY THE CONTRACTOR, WITH NO EXTRA COMPENSATION BEING AWARDED UNDER THIS CONTRACT. THE RESPONSIBILITY FOR THE REPAIR OR REPLACEMENT OF ANY UTILITY, STRUCTURE, LANDSCAPING, ETC. DAMAGED OR DESTROYED BY THE CONTRACTOR DURING MOBILIZATION OR CONSTRUCTION SHALL BE BORNE SOLELY BY THE CONTRACTOR, WITH NO EXPENSE BEING CHARGED TO THE ENGINEER OR OWNER. PRIOR TO ACCEPTANCE OF THIS REPAIR OR REPLACEMENT, THE CONTRACTOR SHALL PRESENT THE OWNER WITH A "SIGNOFF LETTER", SIGNED BY A RESPONSIBLE OFFICIAL OF THE OWNER OF THE DAMAGED ITEM(S) STATING THAT THE REPAIR OR REPLACEMENT IS ACCEPTABLE.
3. EXISTING JOISTS ARE PER EXISTING PLANS.
4. VERIFY THAT HORIZONTAL BRACING RODS, SHOWN ON OVERALL PLAN, DO NOT CONFLICT WITH DUCTS.
5. IF DUCTS CONFLICT WITH JOIST BRIDGING, INSTALL NEW SIMILAR BRIDGING ADJACENT TO DUCT AND REMOVE CONFLICTING BRIDGING.
6. ALL STEEL WORK SHALL BE IN ACCORDANCE WITH THE AISC SPECIFICATION. SHOP DRAWINGS SHALL BE SUBMITTED AND REVIEWED BY THE ENGINEER BEFORE COMMENCING FABRICATION.
7. SEE ARCHITECTURAL DESIGN SPECIFICATIONS AND DRAWWINGS FOR STEEL COATING REQUIREMENTS
8. THE CONTRACTOR SHALL BE RESPONSIBLE FOR ALL ERECTION AIDES THAT INCLUDE BUT ARE NOT LIMITED TO, ERECTION ANGLES, LIFT HOLES AND OTHER AIDES.
9. SHOP DRAWINGS ARE REQUIRED. SHOP DRAWING SUBMITTALS PROCESSED BY THE ENGINEER ARE NOT CHANGE ORDERS. THE PURPOSE OF SHOP DRAWING SUBMITTALS BY THE CONTRACTOR IS TO DEMONSTRATE TO THE ENGINEER THAT THE CONTRACTOR UNDERSTANDS THE DESIGN CONCEPT; BY INDICATING WHICH MATERIAL IS INTENDED TO BE FURNISHED AND INSTALLED, AND BY DETAILING THE INTENDED FABRICATION AND INSTALLATION METHODS. IF DEVIATIONS; DISCREPANCIES OR CONFLICTS BETWEEN THE SHOP DRAWING SUBMITTALS AND THE CONTRACT DOCUMENTS ARE DISCOVERED EITHER PRIOR TO OR AFTER THE SHOP DRAWING SUBMITTALS ARE PROCESSED BY THE ENGINEER; THE DESIGN DRAWINGS AND SPECIFICATIONS SHALL CONTROL AND SHALL BE FOLLOWED.

STRUCTURAL DESIGN CRITERIA

1. STRUCTURAL DESIGN IS BASED ON THE APPLICABLE REQUIREMENTS OF THE INTERNATIONAL BUILDING CODE (IBC 2015)

2. UNLESS NOTED OTHERWISE, STRUCTURES ARE DESIGNED FOR THE LOADS LISTED BELOW
 2.A. FLOOR LOADING
  2.A.1. THE DESIGN LIVE LOAD AT PENTHOUSE FLOOR: 50 PSF △1
  2.A.2. THE DESIGN LIVE LOAD AT STAIRS: 100 PSF
  2.A.3. NO LIVE LOAD REDUCTION HAS BEEN CONSIDERED
 2.B. ROOF LOADING
  2.B.1. THE DESIGN LIVE LOAD AT METAL DECK ROOFS: 20 PSF
 2.C. SNOW LOADING
  2.C.1. GROUND SNOW LOAD, PG= 25 PSF
  2.C.2. SNOW EXPOSURE FACTOR, CE= 1.0
  2.C.3. SNOW LOAD IMPORTANCE FACTOR, IS= 1.1
  2.C.4. THERMAL FACTOR, CT= 1.1 (STRUCTURE KEPT ABOVE FREEZING)
  2.C.5. MINIMUM SNOW LOAD, PM= 22 PSF
  2.C.6. UNIFORM ROOF DESIGN LOAD= 22 PSF
 2.D. WIND LOADING
  2.D.1. BASIC WIND SPEED (3-SEC GUST) = 120 MPH
  2.D.2. RISK CATEGORY = III
  2.D.3. EXPOSURE CATEGORY = C
  2.D.4. DIRECTIONALITY FACTOR KD = 0.85
  2.D.5. INTERNAL PRESSURE COEFFICIENT = +/-0.18
  2.D.6. EXTERIOR COMPONENTS AND CLADDING DESIGNED IN ACCORDANCE WITH IBC REQUIREMENTS
 2.E. EARTHQUAKE LOADING
  2.E.1. IMPORTANCE FACTOR, IE = 1.25
  2.E.2. RISK CATEGORY = III
  2.E.3. MAPPED SPECTRAL RESPONSE ACCELERATION, 0.12
  2.E.4. MAPPED SPECTRAL RESPONSE ACCELERATION, 0.057
  2.E.5. SITE CLASS = C
  2.E.6. SPECTRAL RESPONSE COEFFICIENT, SDS= 0.128
  2.E.7. SPECTRAL RESPONSE COEFFICIENT, SD1= 0.091
  2.E.8. SEISMIC DESIGN CATEGORY = B
  2.E.9. BASIC SEISMIC FORCE RESISTANCE SYSTEM = CONCENTRICALLY BRACED FRAMES NOT SPECIFICALLY DETAIL FOR SEISMIC
  2.E.10. SEISMIC RESPONSE COEFFICIENT, CS= 0.053
  2.E.11. SEISMIC RESPONSE MODIFICATION FACTOR, R= 3.0
  2.E.12. ANALYSIS PROCEDURE: EQUIVALENT LATERAL FORCE

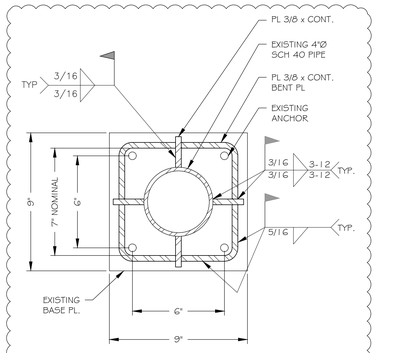

1 COLUMN REINFORCING
N.T.S.

△1

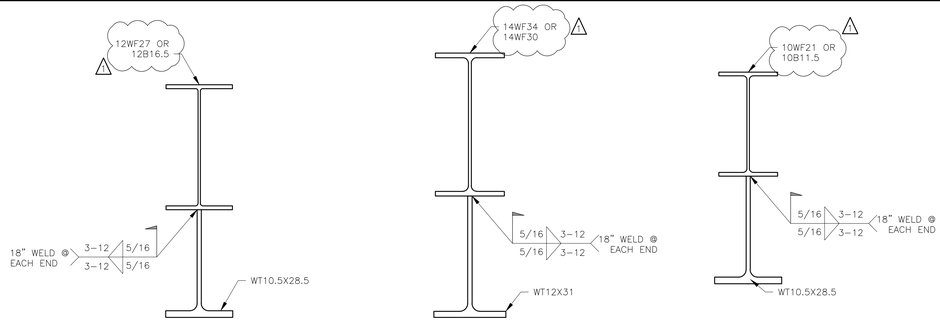

2 BEAM REINFORCING
SCALE: 3"=1'-0"

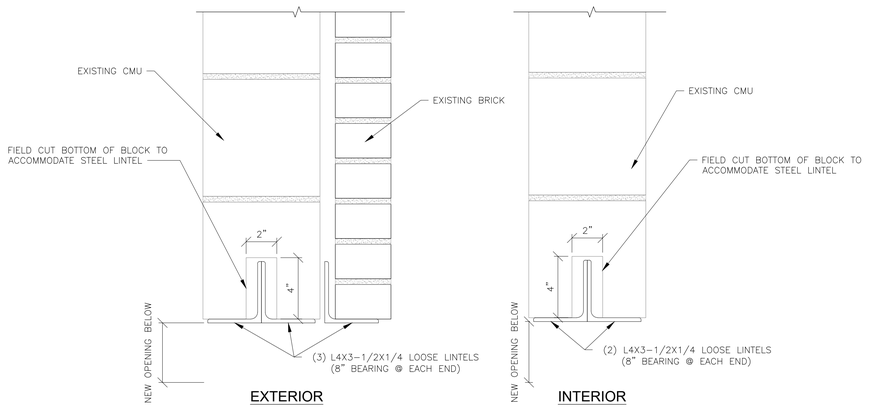

DETAIL NOTES:

1. LINTELS SHALL BE HOT DIPPED GALVANIZED. COAT EXPOSED SURFACES.
2. FILL EXISTING BLOCK CELLS AT JAMBS WITH GROUT FROM LINTEL BEARING DOWN TO BASE
3. CONTRACTOR TO FIELD VERIFY WALL TYPES.
4. REFERENCE ARCH FOR FLASHING

DETAIL 3- LINTEL
FOR OPENINGS < 3'-6" WIDE

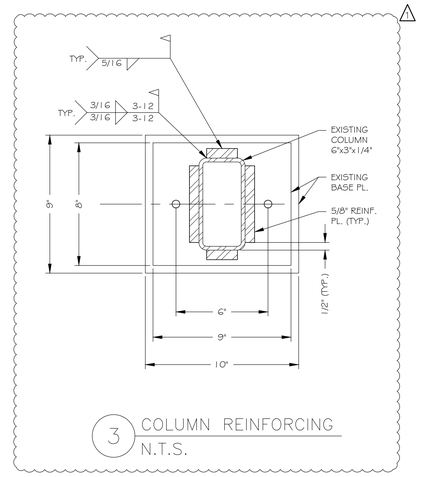

△1

3 COLUMN REINFORCING
N.T.S.

GENERAL STRUCTURAL NOTES

1. VARIABLE DIMENSIONS ARE NOTED WITH AN ASTERISK(*). DIMENSIONS TO BE DETERMINED BY THE EQUIPMENT MANUFACTURER FINAL LAYOUT SHALL BE APPROVED BY THE ENGINEER.
2. DOORS, WINDOWS AND LOUVERS ARE SHOWN ON STRUCTURAL PLANS FOR CLARITY ONLY. SEE ARCHITECTURAL PLANS FOR LOCATIONS AND DIMENSIONS.
3. DIMENSIONS OF EXISTING WORK SHALL BE FIELD VERIFIED BY THE CONTRACTOR PRIOR TO STARTING WORK. DIMENSIONS NOTED FOR EXISTING STRUCTURES INDICATE NOMINAL DIMENSIONS. NEW WORK SHALL NOT BE LOCATED OR SIZED BASED ON THIS INFORMATION ALONE.
4. WHILE PERFORMING WORK, CONTRACTOR IS RESPONSIBLE FOR TEMPORARY SHORING AND BRACING TO ENSURE STRUCTURAL INTEGRITY AS CONSTRUCTION PROGRESSES.

STRUCTURAL STEEL

1. MATERIALS SHALL BE AS FOLLOWS (UNLESS NOTED)
 1.1. WIDE FLANGE MEMBERS SHALL BE ASTM A992.
 1.2. ANGLES, CHANNELS, AND S-SHAPE MEMBERS SHALL BE ASTM A36
 1.3. PLATE WORK SHALL BE ASTM A36.
 1.4. ROUND AND RECTANGULAR HOLLOW STRUCTURAL SECTIONS (HSS) SHALL BE ASTM A500 GRADE C.
2. ALL STRUCTURAL STEEL FRAMING AND CONNECTIONS SHALL BE FURNISHED AND INSTALLED IN ACCORDANCE WITH PROJECT SPECIFICATION. FABRICATION AND ERECTION OF STRUCTURAL STEEL SHALL BE IN ACCORDANCE WITH THE AMERICAN INSTITUTE OF STEEL CONSTRUCTION (AISC) CODE OF STANDARD PRACTICE FOR STEEL BUILDINGS AND BRIDGES.
3. WELDING SHALL CONFORM TO AWS D1.1 ELECTRODES AND SHALL BE 70 KSI TENSILE STRENGRH. ALL WELDERS SHALL BE AWS CERTIFIED.
4. BOLTED CONNECTIONS SHALL BE FURNISHED AND INSTALLED IN ACCORDANCE WITH THE RESEARCH COUNCIL ON STRUCTURAL CONNECTIONS (RCSC) SPECIFICATION FOR STRUCTURAL JOINTS USING ASTM A325 OR A 490 BOLTS. UNLESS NOTED, ALL BOLTS SHALL BE ¾" DIAMETER ASTM F3125 A325-N WITH HEAVY HEX NUTS INSTALLED TO A SNUG-TIGHTENED CONDITION. BOLT HOLE SHALL BE STANDARD BEING 1/16" LARGER THAN BOLT DIAMETER. BOLT SPACING SHALL BE 3 INCHES ON CENTER UNLESS NOTED.
5. WELD SIZES NOT SHOWN ON THE DRAWING SHALLL CONFORM TO THE THICKNESS OF ADJOINING STEEL TO MEET MINIMUM WELD SIZE PER AWS SPECIFICATION. WELDS SIZES SHOWN ON DRAWING ARE A MINIMUM AND SHALL BE INCREASED ACCORDING TO THE THICKNESS OF ADJOINING STEEL TO MEET THE MINIMUM WELD SIZE PER AWS SPECIFICATION.
6. NO CROSS FLANGE WELDING IS PERMITTED WITHOUT ENGINEER'S APPROVAL.
7. WHILE PERFORMING MODIFICATION OR RELOCATION OF EXISTING STEEL. THE CONTRACTOR SHALL BE RESPONSIBLE FOR TEMPORARY SHORING AND BRACING TO ENSURE THE STRUCTURAL INTEGRITY DURING THE CONSTRUCTION PROCESS.
8. STRUCTURAL STEEL SHALL BE COATED OR GALVANIZED AS INDICATED IN THE PROJECT SPECIFICATION. DAMAGE TO PAINT OR GALVANIZED SURFACES SHALL BE REPAIRED IMMEDIATELY AFTER WELDING IS COMPLETED.

STEEL JOISTS

1. STEEL JOISTS SHALL BE DESIGNED, FABRICATED, AND INSTALLED IN ACCORDANCE WITH THE STEEL JOIST INSTITUTE (SJI) STANDARD SPECIFICATION.
2. THE STEEL JOISTS SHALL HAVE A COAT OF MANUFACTURERS STANDARD SHOP PRIMER PAINT UNLESS OTHERWISE NOTED.
3. STEEL BRIDGING SHALL BE DESIGNED, FABRICATED, AND INSTALLED IN ACCORDANCE WITH THE SJI SPECIFICATION.
4. CONTRACTOR SHALL COORDINATE LOCATION OF BRIDGING TO AVOID INTERFERENCE WITH OTHER PORTIONS OF THE WORK.
5. STEEL JOIST SHALL BE DESIGNED FOR NET UPLIFT AS INDICATED BELOW. ZONES DEFINED PER ASCE 7-2010 FOR HIP ROOF. ROOF PRESSURES SHOWN ARE STRENGTH LEVEL LOADS AND INCLUDE INTERNAL PRESSURE:

 ZONE 1: 32 PSF
 ZONE 2: 36 PSF
 ZONE 3: 36 PSF
 INTERNAL PRESSURE: 12PSF

STEEL ROOF DECK

1. FOLLOW ALL OSHA, STATE, AND LOCAL RULES FOR ERECTION.
2. STEEL ROOF DECK SHALL BE 1½" X 20 GA WIDE RIB, TYPE B PER STEEL DECK INSTITUTE STANDARD. SHEET SHALL BE ASTM A1008 WITH A MINIMUM YIELD STRENGTH OF 33 KSI.
3. STEEL DECK SHALL HAVE A COAT OF MANUFACTURERS STANDARD SHOP PRIMER PAINT UNLESS NOTED OTHERWISE.
4. THE DECK MANUFACTURER SHALL FURNISH RIDGE AND VALLEY PLATES, FLAT PLATES AT CHANGE OF DECK DIRECTION AND SUMP PANS AS SHOWN ON PLANS.
5. INSTALL DECK PANELS AND ACCESSORIES ACCORDING TO STEEL DECK INSTITUTE (SDI) SPECIFICATIONS AND THE SDI MANUAL OF CONSTRUCTION WITH STEEL DECK.
6. PLACE DECK PANELS ON STRUCTURAL SUPPORTS WITH ENDS LAPPED OR BUTTED OVER WITH A MINIMUM END BEARING OF 1-1/2 INCHES.
7. ANCHOR DECK UNITS TO STEEL SUPPORTING MEMBERS BY 5/8" EFFECTIVE DIAMETER ARC SPOT WELDS WITH A 36/4 PATTERN OR APPROVED EQUAL. SIDE LAPS SHALL BE FASTENED WITH #10 SCREWS (0.190 INCH DIA.) AT 18" MAXIMUM INTERVAL OR APPROVED EQUAL.
8. ALL WELDING SHALL BE IN ACCORDANCE WITH AWS D1.3.

CONCRETE SLAB ON DECK

1. FOLLOW ALL OSHA, STATE, AND LOCAL RULES FOR ERECTION.
2. FORM DECKING SHALL BE 1.5VLI GA 20. DECK SHALL BE ATTACHED PER SDI SPECIFICATION.
3. CONCRETE SLAB OVER DECK SHALL BE 4INCH DEEP WITH #4@6 EACH WAY.

DANIEL PATRICK CACERES
081-007646
EXPIRES 11/30/2022
02/21/2022

KEITH Engineering Design
www.kedmep.com
707 NE Jefferson Ave
Peoria, IL 61603
309 / 839-4005 : office
309 / 214-0065 : fax

ROCKFORD PUBLIC SCHOOLS
FEHR GRAHAM
ENGINEERING & ENVIRONMENTAL
230 WOODLAWN AVENUE
AURORA, ILLINOIS 60506
Saavedra Group Architects
504 N CHURCH STREET
ROCKFORD, ILLINOIS 61103

No.	Date	Revisions
1	3/4/22	ADDENDUM #1

GUILDFORD HIGH SCHOOL
HVAC UPGRADE
ROCKFORD, ILLINOIS

Sheet Title: GENERAL NOTES AND REINFORCING DETAILS

Proj. No.: 21-825
Date: 2/21/2022
Drawn: EJA
Approved: DC
Sheet No.: S1.05

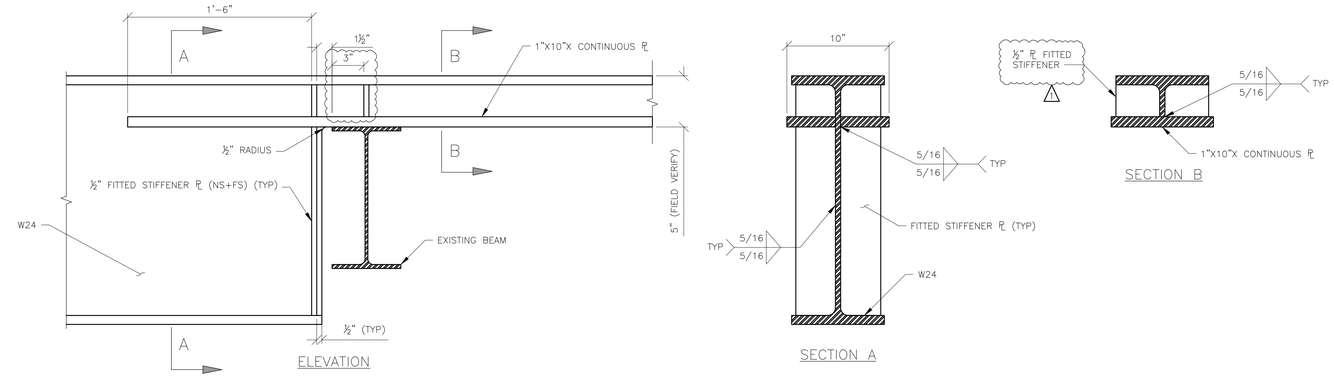

1 BEAM EXTENSION
SCALE: 2"=1'-0"

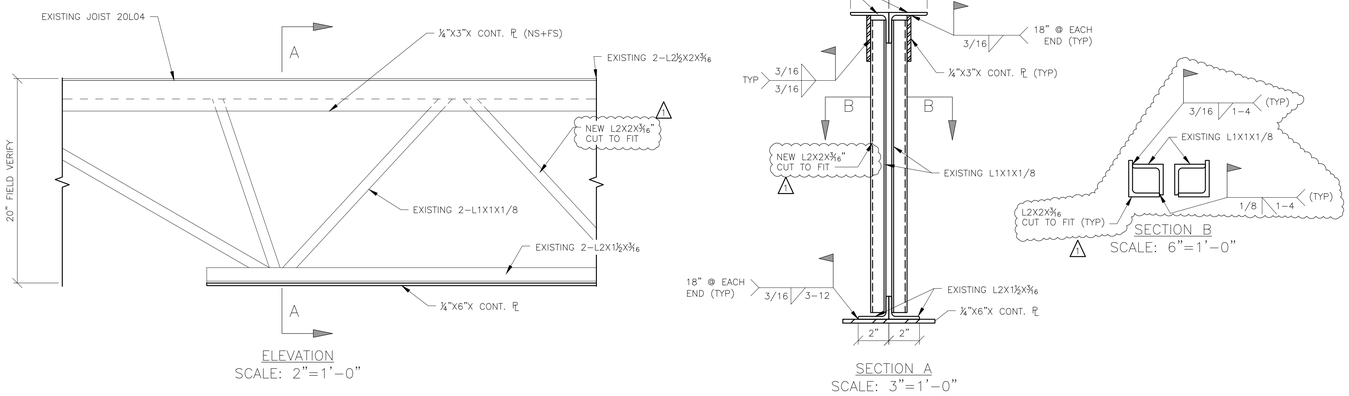

2 JOIST REINFORCING
SCALE: VARIES (SEE ABOVE)

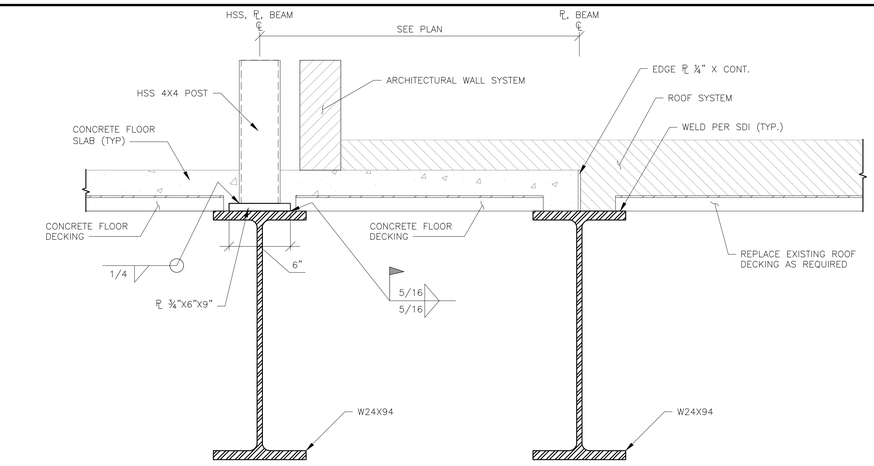

4 POST TO BEAM CONNECTION
SCALE: 2"=1'-0"

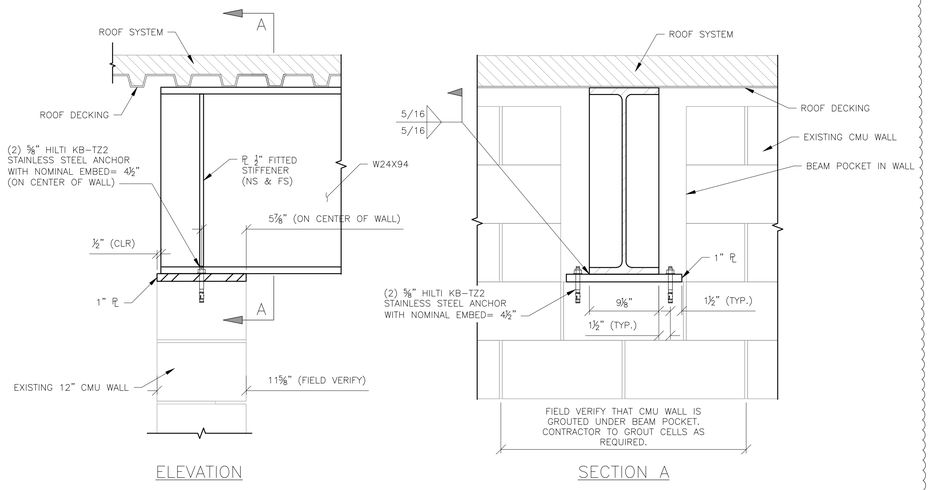

5 BEAM TO WALL CONNECTION
SCALE: 1-1/2"=1'-0"

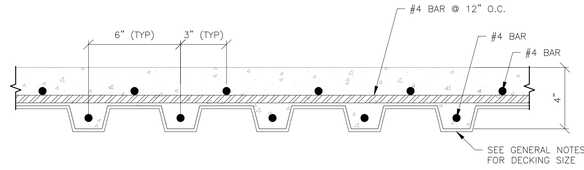

6 TYPICAL CONCRETE FLOOR DECK REINFORCEMENT
SCALE: 3"=1'-0"

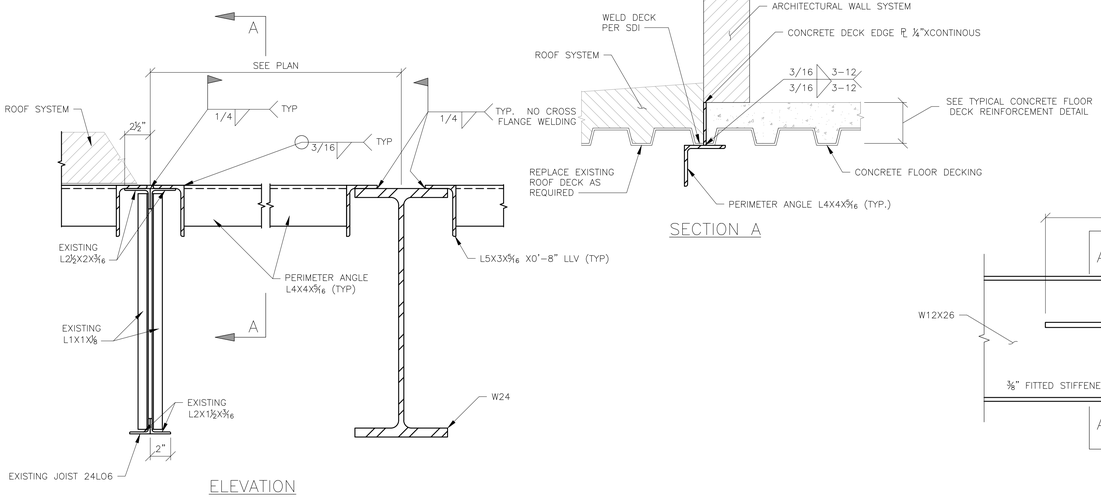

3 PERIMETER ANGLE
N.T.S.

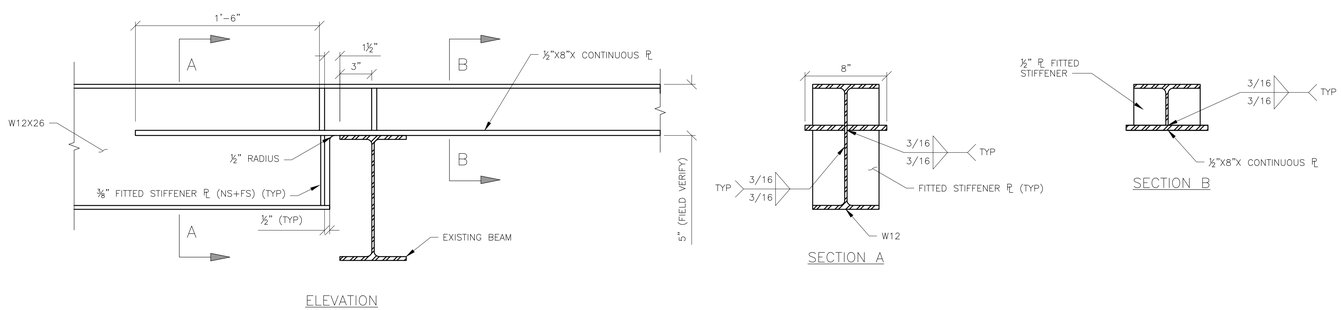

7 BEAM EXTENSION
N.T.S.

DANIEL PATRICK CACERES
081-007646
EXPIRES 11/30/2022
02/21/2022

KEITH Engineering Design
www.kedmep.com
309 / 839-4005 : office
309 / 214-0060 : fax
707 NE Jefferson Ave
Peoria, IL 61603

ROCKFORD PUBLIC SCHOOLS

FEHR GRAHAM
ENGINEERING & ENVIRONMENTAL
230 WOODLAWN AVENUE
AURORA, ILLINOIS 60506

Saavedra Group Architects
504 N CHURCH STREET
ROCKFORD, ILLINOIS 61103

No.	Date	Revisions
1	3/14/22	ADDENDUM #1

GUILDFORD HIGH SCHOOL
HVAC UPGRADE
ROCKFORD, ILLINOIS

Sheet Title:
PENTHOUSE FLOOR SECTIONS AND DETAILS

Proj. No.:	21-825
Date:	2/21/2022
Drawn:	EJA
Approved:	DC
Sheet No.:	S1.06

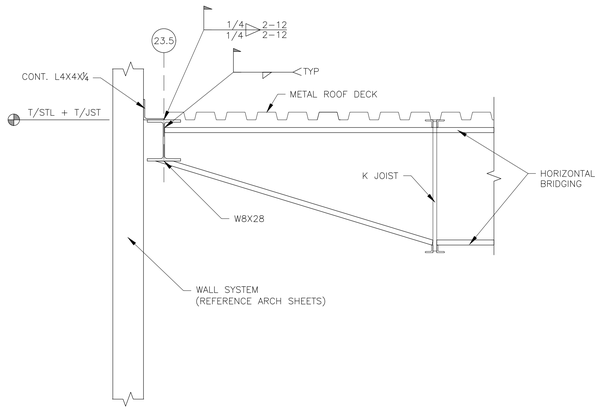

1 PENTHOUSE ROOF SECTION
SCALE: 1"=1'-0"

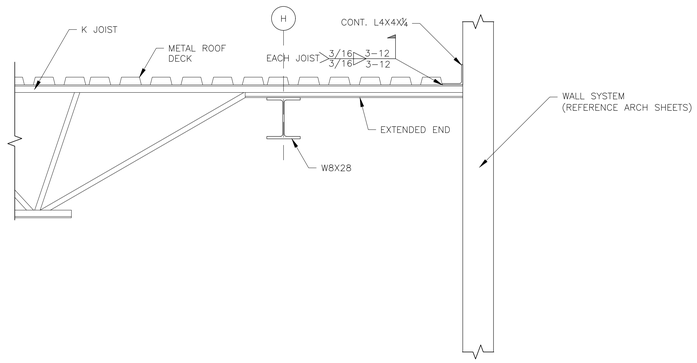

2 PENTHOUSE ROOF SECTION
SCALE: 1"=1'-0"

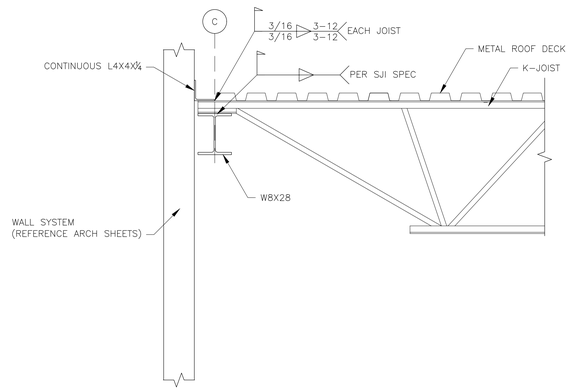

3 PENTHOUSE ROOF SECTION
SCALE: 1"=1'-0"

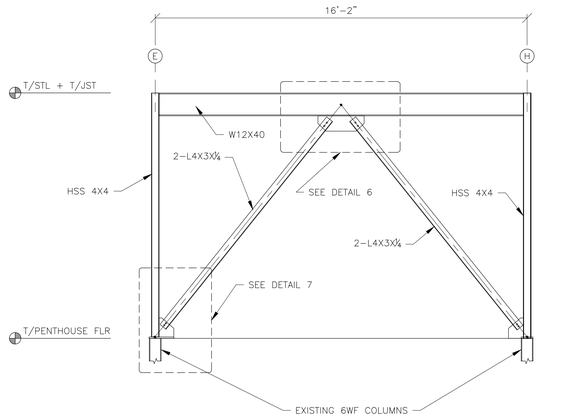

4 VERTICAL BRACING ELEVATION
GRID 23.5 SHOWN SCALE: 3/8"=1'-0"
GRID 25 OFFSET SIM.

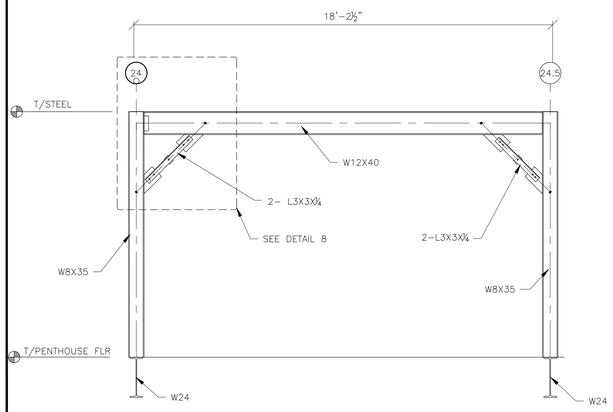

5 KNEE BRACING ELEVATION
GRID H SHOWN SCALE: 3/8"=1'-0"
GRID C SIM.

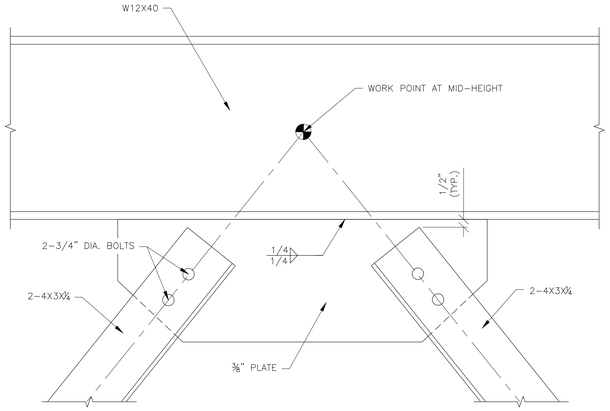

6 VERTICAL BRACING CONNECTION
SCALE: 3"=1'-0"

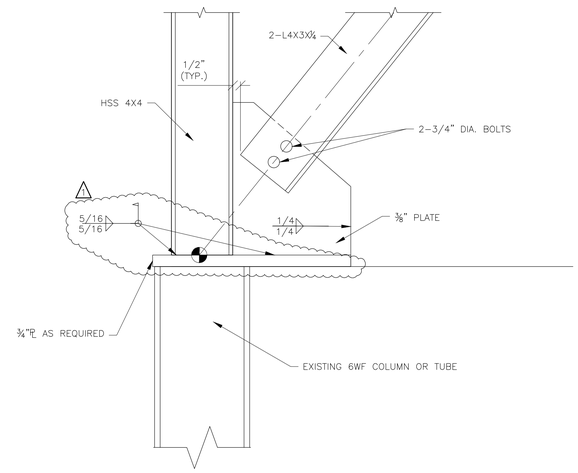

7 VERTICAL BRACING CONNECTION
SCALE: 3"=1'-0"

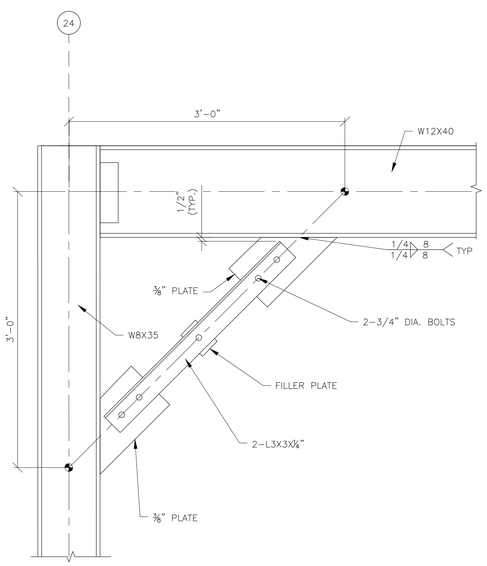

8 KNEE BRACE CONNECTION
SCALE: 1½"=1'-0"

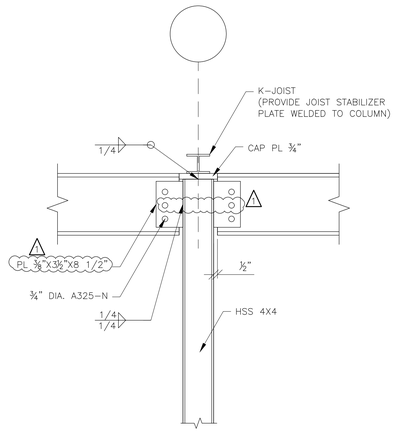

9 BEAM TO COLUMN CONNECTION
SCALE: 1½"=1'-0"

DANIEL PATRICK CACERES 081-007646
EXPIRES 11/30/2022 02/21/2022

KEITH Engineering Design
www.keithep.com
707 NE Jefferson Ave Peoria, IL 61603
309 / 938-4005 : office
309 / 214-0063 : fax

ROCKFORD PUBLIC SCHOOLS

FEHR GRAHAM ENGINEERING & ENVIRONMENTAL
230 WOODLAWN AVENUE AURORA, ILLINOIS 60506

Saavedra Group Architects
504 N CHURCH STREET ROCKFORD, ILLINOIS 61103

Revisions

No.	Date	
1	3/4/22	ADDENDUM #1

GUILDFORD HIGH SCHOOL
HVAC UPGRADE
ROCKFORD, ILLINOIS

Sheet Title: PENTHOUSE ROOF SECTIONS AND DETAILS

Proj. No.: 21-825
Date: 2/21/2022
Drawn: EJA
Approved: DC
Sheet No.: S1.07

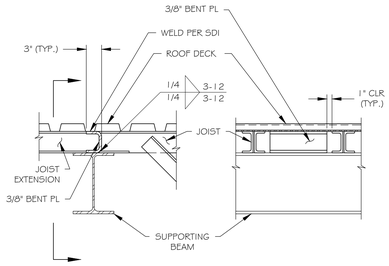

ELEVATION SECTION

1 SHEAR CONNECTOR @ ROOF DECK
N.T.S.

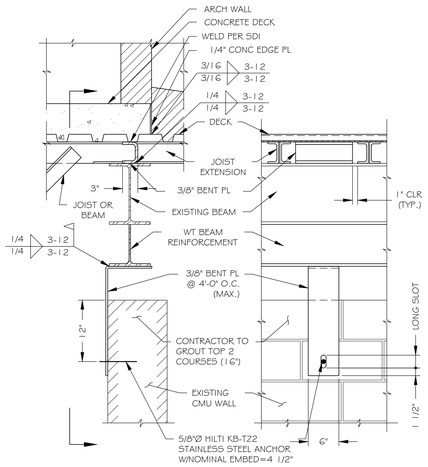

ELEVATION SECTION

2 SHEAR CONNECTOR @ FLOOR DECK
N.T.S.

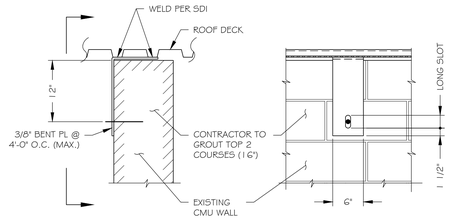

ELEVATION SECTION

3 SHEAR CONNECTOR @ SOUTH WALL
N.T.S.

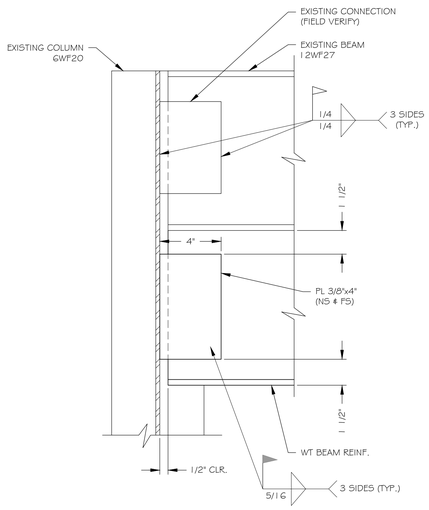

CONNECTION INFORMATION NOT AVAILABLE DURING DESIGN.
CONTRACTOR TO VERIFY FIELD CONDITIONS PRIOR TO FABRICATION.

4 FRAME BEAM CONNECTION
N.T.S.

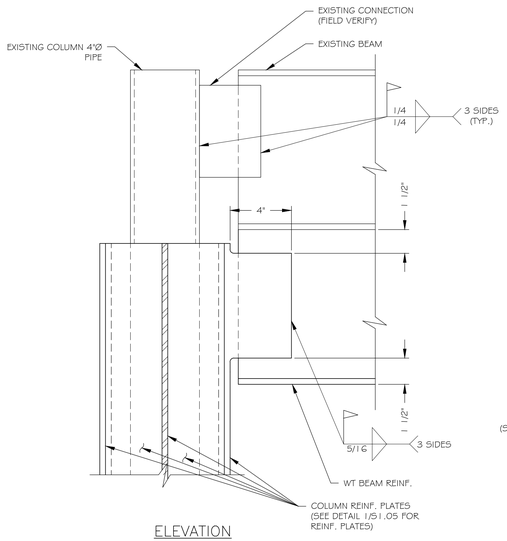

ELEVATION

5 FRAME BEAM CONNECTION
N.T.S.

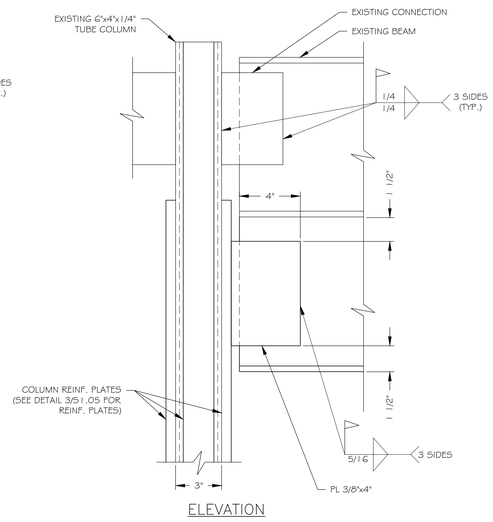

ELEVATION

6 FRAME BEAM CONNECTION
N.T.S.

DANIEL PATRICK CACERES
081-007646
EXPIRES 11/30/2022
02/21/2022

KEITH Engineering Design
www.kedmep.com
707 NE Jefferson Ave
Peoria, IL 61603
309 / 839-4005 : office
309 / 214-0063 : fax

ROCKFORD PUBLIC SCHOOLS
FEHR GRAHAM
ENGINEERING & ENVIRONMENTAL
230 WOODLAWN AVENUE
AURORA, ILLINOIS 60506
Saavedra Group Architects
504 N CHURCH STREET
ROCKFORD, ILLINOIS 61103

Revisions

No.	Date	
1	3/14/22	ADDENDUM #1

GUILDFORD HIGH SCHOOL
HVAC UPGRADE
ROCKFORD, ILLINOIS

Sheet Title:
SECTIONS AND DETAILS

Proj. No.:	21-825
Date:	2/21/2022
Drawn:	EJA
Approved:	DC

Sheet No.:
S1.08

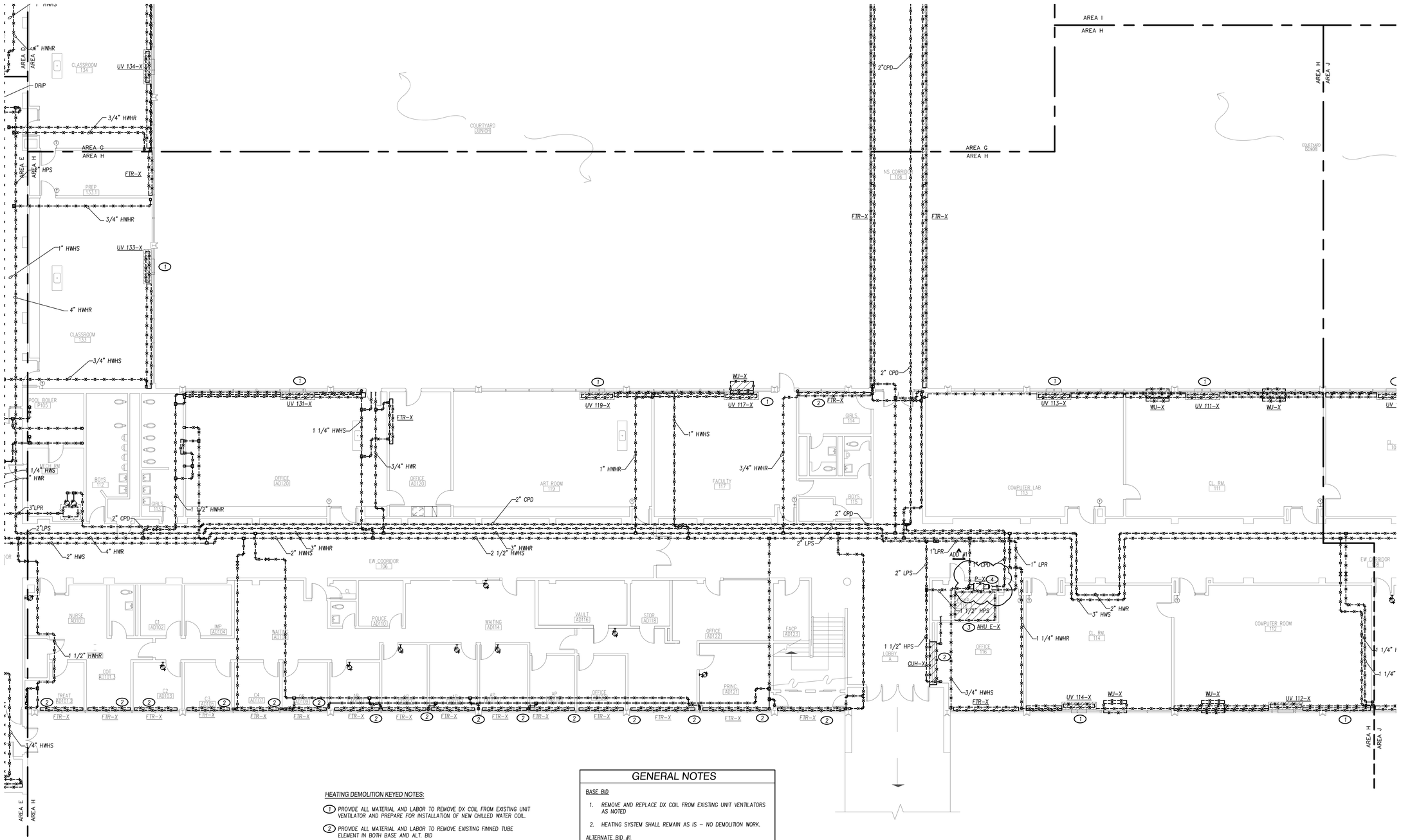

HEATING DEMOLITION KEYED NOTES:

1. PROVIDE ALL MATERIAL AND LABOR TO REMOVE DX COIL FROM EXISTING UNIT VENTILATOR AND PREPARE FOR INSTALLATION OF NEW CHILLED WATER COIL.
2. PROVIDE ALL MATERIAL AND LABOR TO REMOVE EXISTING FINNED TUBE ELEMENT IN BOTH BASE AND ALT. BID
3. PROVIDE ALL MATERIAL AND LABOR TO REMOVE EXISTING AIR-HANDLING UNIT AND ALL ASSOCIATED PIPING AND CONTROLS.
4. PROVIDE ALL MATERIAL AND LABOR TO REMOVE EXISTING CONDENSATE VACUUM PUMP AND ALL ASSOCIATED PIPING CONTROLS FOR ALT. BID #1.

ADD #1

GENERAL NOTES

BASE BID

1. REMOVE AND REPLACE DX COIL FROM EXISTING UNIT VENTILATORS AS NOTED
2. HEATING SYSTEM SHALL REMAIN AS IS – NO DEMOLITION WORK.

ALTERNATE BID #1

1. ALL EXISTING HEATING HOT WATER SUPPLY/RETURN PIPING AND HEATING EQUIPMENT TO BE REMOVED AND REPLACED AS INDICATED ON DRAWINGS.
2. REFER TO DRAWING H11H.A FOR NEW HEATING WORK UNDER ALTERNATE BID #1.

1 FIRST FLOOR PLAN - HEATING DEMOLITION - AREA H
SCALE: 1/8" = 1'-0"

NORTH

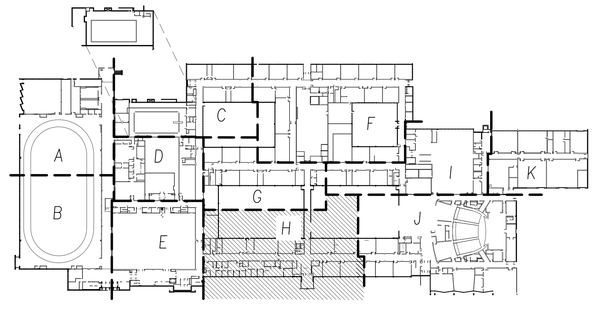

KEY PLAN
SCALE: NOT TO SCALE

NORTH

DATE: 2/21/2022

KEITH Engineering Design
www.keitmep.com
707 NE Jefferson Ave
Peoria, IL - 61603
309 / 698-4005 : office
309 / 214-0063 : fax

ROCKFORD PUBLIC SCHOOLS
Saavedra Group Architects
504 N CHURCH STREET
ROCKFORD, ILLINOIS 61103

FEHR GRAHAM
ENGINEERING & ENVIRONMENTAL
230 WOODLAWN AVENUE
AURORA, ILLINOIS 60506

Revisions

No.	Date	
1	3/17/2022	ADDENDUM 1

GUILFORD HIGH SCHOOL
HVAC UPGRADE
ROCKFORD, ILLINOIS

Sheet Title: FIRST FLOOR PLAN - HEATING DEMO. - AREA H

Proj. No.: 2251
Date: 02/21/2022
Drawn: GBW
Approved: RCR
Sheet No.: HD11H

HEATING DEMOLITION KEYED NOTES:

1. REMOVED PER ADDENDUM 1
2. DEMOLISH AND REMOVE EXISTING UNIT VENTILATOR INCLUDING ASSOCIATED PIPING AND CONTROLS.
3. DEMOLISH AND REMOVE EXISTING WINDOW AIR CONDITIONING UNIT.
4. PROVIDE ALL MATERIAL AND LABOR TO REMOVE EXISTING FINNED TUBE RADIATORS, CONVECTORS AND CABINET HEATERS IN BOTH BASE AND ALT. BID #1.
5. PROVIDE ALL MATERIAL AND LABOR TO REMOVE EXISTING AIR-HANDLING UNIT AND ALL ASSOCIATED PIPING AND CONTROLS.
6. PROVIDE ALL MATERIAL AND LABOR TO REMOVE EXISTING STEAM TO HOT WATER HEAT EXCHANGERS. ALL EXISTING STEAM SPECIALTIES AND PIPING TO BE REMOVED BELOW HEAT EXCHANGER AS NECESSARY FOR REPLACEMENT AND RE-INSTALLATION.
7. PROVIDE ALL MATERIAL AND LABOR TO REMOVE EXISTING HOT WATER CIRCULATION PUMPS AND PIPING AS INDICATED.

ADD #1

GENERAL NOTES

BASE BID

1. REMOVE AND REPLACE DX COIL FROM EXISTING UNIT VENTILATORS AS NOTED
2. HEATING SYSTEM SHALL REMAIN AS IS – NO DEMOLITION WORK.

ALTERNATE BID #1

1. ALL EXISTING HEATING HOT WATER SUPPLY/RETURN PIPING AND HEATING EQUIPMENT TO BE REMOVED AND REPLACED AS INDICATED ON DRAWINGS.
2. REFER TO DRAWING H11K.A FOR NEW HEATING WORK UNDER ALTERNATE BID #1.

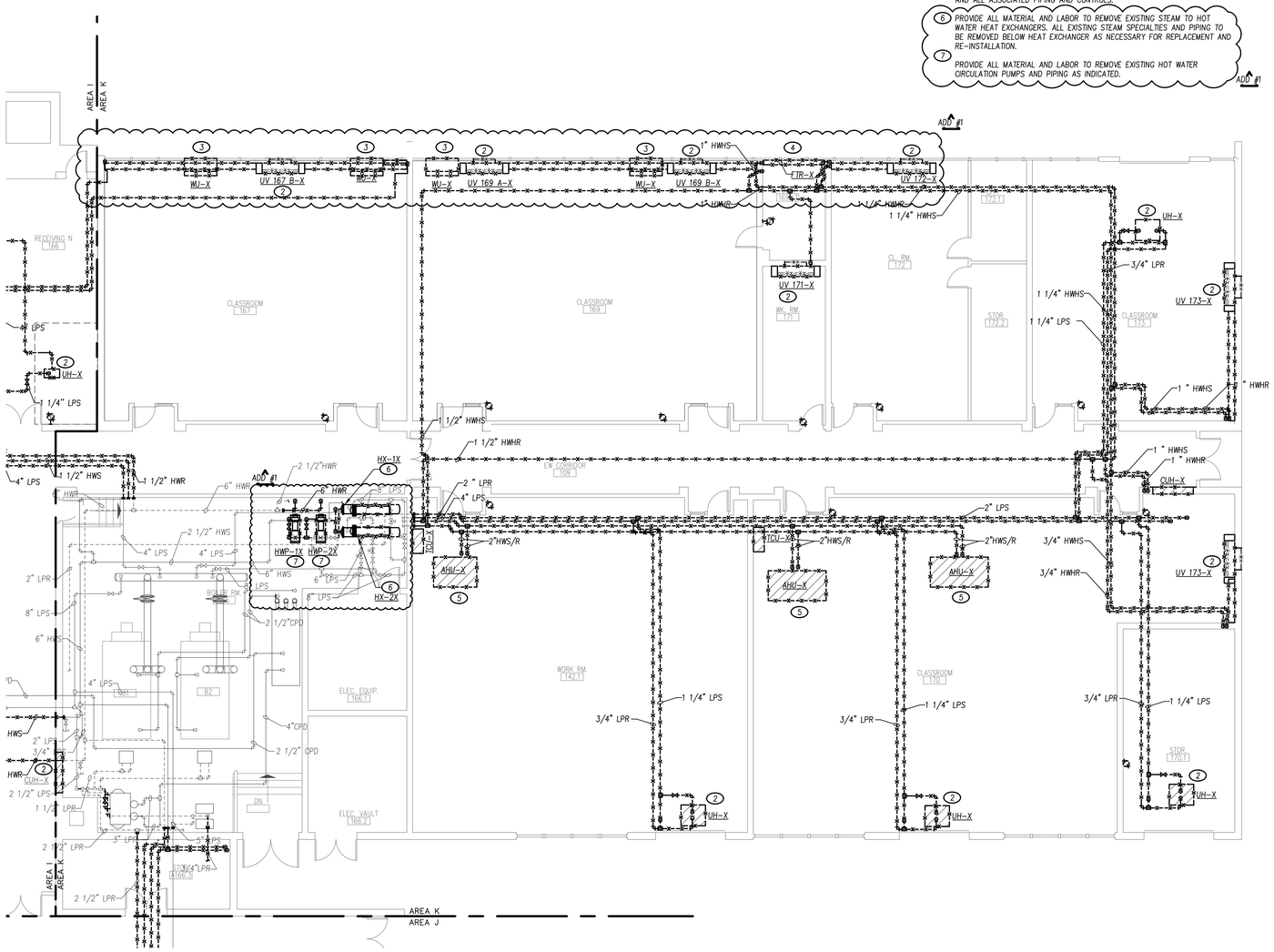

1 FIRST FLOOR PLAN - HEATING DEMOLITION - AREA K
SCALE: 1/8" = 1'-0"

NORTH

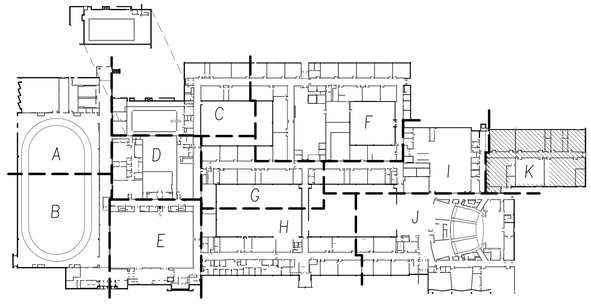

KEY PLAN
SCALE: NOT TO SCALE

NORTH

KEITH Engineering Design
www.keithmep.com
707 SE Jefferson Ave. Suite 1
Peoria, IL 61603
309.1636.4000 office
309.714.4063 fax

ROCKFORD PUBLIC SCHOOLS
FEHR GRAHAM ENGINEERING & ENVIRONMENTAL
230 WOODLAWN AVENUE
AURORA, ILLINOIS 60506
Saavedra Group Architects
504 W. CHURCH STREET
ROCKFORD, ILLINOIS 61103

REGISTERED PROFESSIONAL ENGINEER
BY: REF
052-056761
STATE OF ILLINOIS

DATE: 2/21/2022

No.	Date	Revisions
1	3/17/2022	ADDENDUM 1

GUILFORD HIGH SCHOOL
HVAC UPGRADE
ROCKFORD, ILLINOIS

Sheet Title:
FIRST FLOOR PLAN - HEATING DEMO. - AREA K

Proj. No.: 2251
Date: 02/21/2022
Drawn: GBW
Approved: RCR
Sheet No.:
HD11K

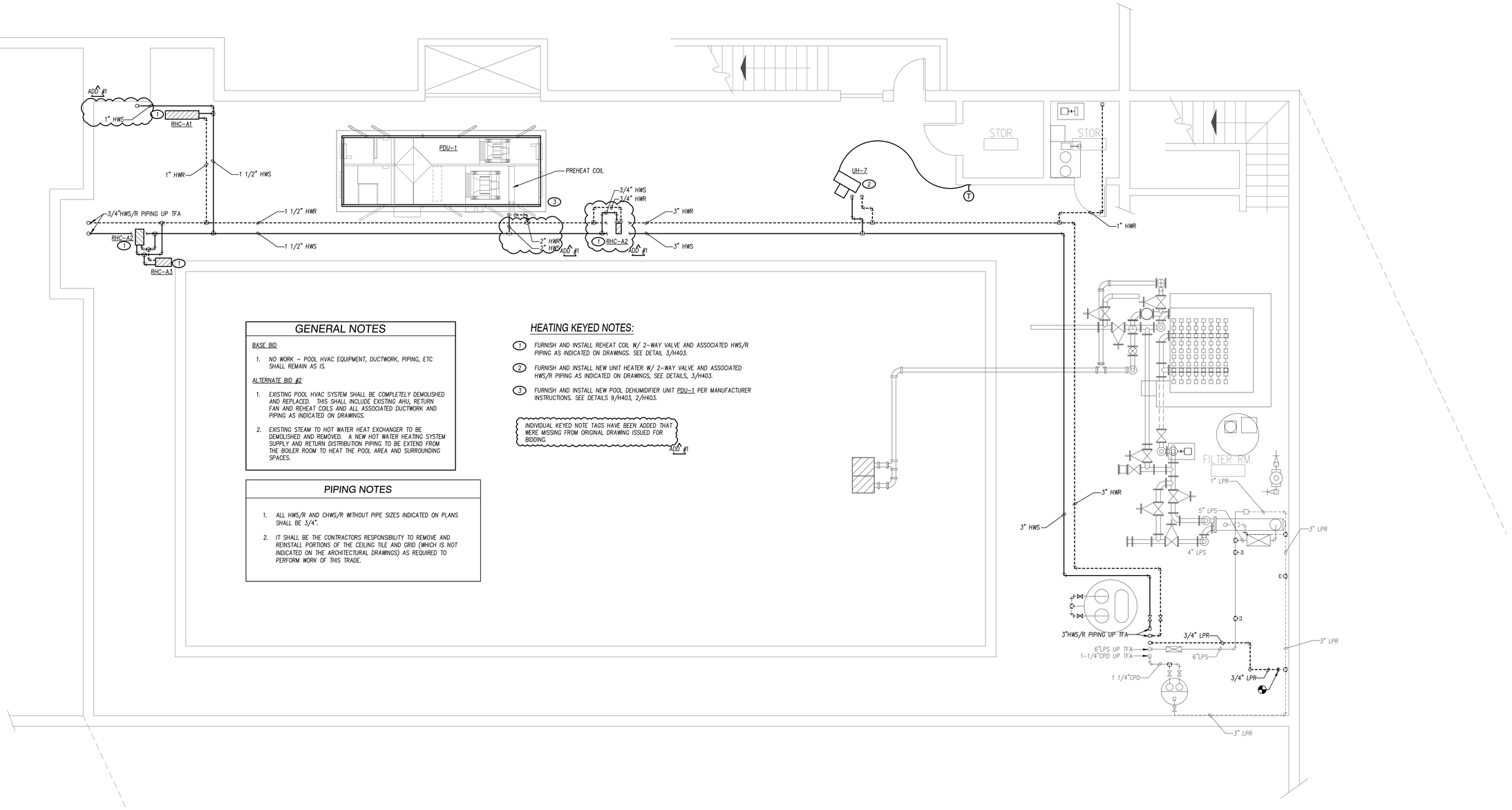

GENERAL NOTES

BASE BID

1. NO WORK – POOL HVAC EQUIPMENT, DUCTWORK, PIPING, ETC SHALL REMAIN AS IS.

ALTERNATE BID #2

1. EXISTING POOL HVAC SYSTEM SHALL BE COMPLETELY DEMOLISHED AND REPLACED. THIS SHALL INCLUDE EXISTING AHU, RETURN FAN AND REHEAT COILS AND ALL ASSOCIATED DUCTWORK AND PIPING AS INDICATED ON DRAWINGS.
2. EXISTING STEAM TO HOT WATER HEAT EXCHANGER TO BE DEMOLISHED AND REMOVED. A NEW HOT WATER HEATING SYSTEM SUPPLY AND RETURN DISTRIBUTION PIPING TO BE EXTEND FROM THE BOILER ROOM TO HEAT THE POOL AREA AND SURROUNDING SPACES.

PIPING NOTES

1. ALL HWS/R AND CHWS/R WITHOUT PIPE SIZES INDICATED ON PLANS SHALL BE 3/4".
2. IT SHALL BE THE CONTRACTORS RESPONSIBILITY TO REMOVE AND REINSTALL PORTIONS OF THE CEILING TILE AND GRID (WHICH IS NOT INDICATED ON THE ARCHITECTURAL DRAWINGS) AS REQUIRED TO PERFORM WORK OF THIS TRADE.

HEATING KEYED NOTES:

1. FURNISH AND INSTALL REHEAT COIL W/ 2-WAY VALVE AND ASSOCIATED HWS/R PIPING AS INDICATED ON DRAWINGS. SEE DETAIL 3/H403.
2. FURNISH AND INSTALL NEW UNIT HEATER W/ 2-WAY VALVE AND ASSOCIATED HWS/R PIPING AS INDICATED ON DRAWINGS, SEE DETAILS, 3/H403.
3. FURNISH AND INSTALL NEW POOL DEHUMIDIFIER UNIT PDU-1 PER MANUFACTURER INSTRUCTIONS. SEE DETAILS 9/H403, 2/H403.

INDIVIDUAL KEYED NOTE TAGS HAVE BEEN ADDED THAT WERE MISSING FROM ORIGINAL DRAWING ISSUED FOR BIDDING.

ADD #1

1 ALTERNATE BID #2
BASEMENT PLAN - HEATING NEW WORK - AREA C
SCALE: 1/4" = 1'-0"

NORTH

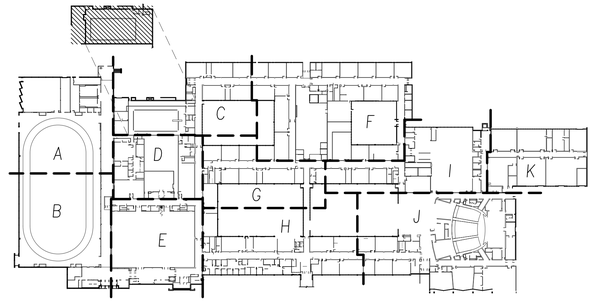

KEY PLAN
SCALE: NOT TO SCALE

NORTH

DATE: 2/21/2022

KEITH Engineering Design
www.keithmep.com
707 NE Jefferson Ave
Peoria, IL 61603
309 / 939-4005 : office
309 / 214-0063 : fax

ROCKFORD PUBLIC SCHOOLS
FEHR GRAHAM ENGINEERING & ENVIRONMENTAL
230 WOODLAWN AVENUE
AURORA, ILLINOIS 60506
Saavedra Group Architects
504 N CHURCH STREET
ROCKFORD, ILLINOIS 61103

No.	Date	Revisions
1	3/17/2022	ADDENDUM 1

GUILFORD HIGH SCHOOL
HVAC UPGRADE
ROCKFORD, ILLINOIS

Sheet Title:
BASEMENT PLAN - HEATING
NEW WORK - AREA C
ALTERNATE BID #2

Proj. No.: 2251
Date: 02/21/2022
Drawn: GBW
Approved: RCR
Sheet No.: H01C.A

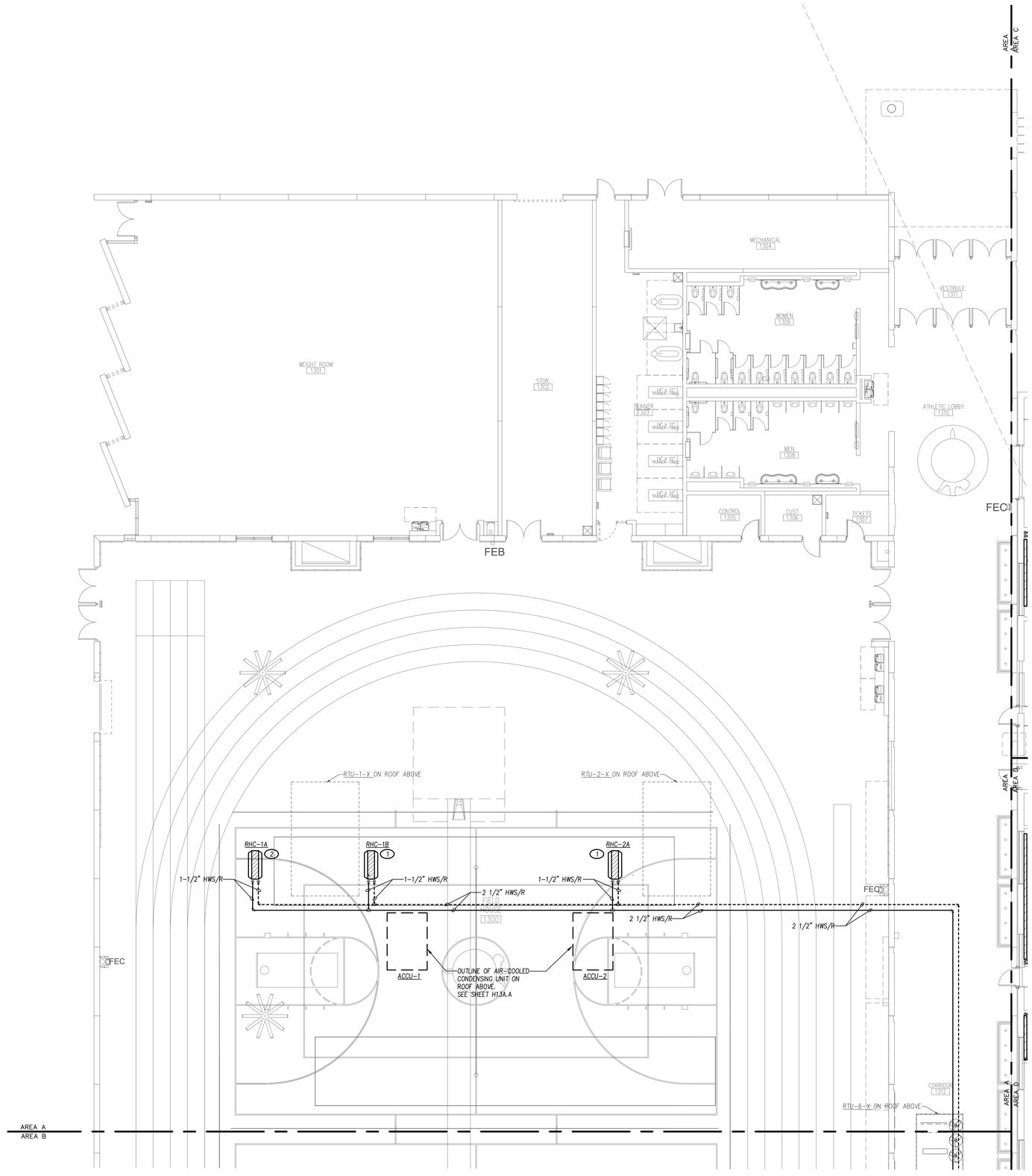

1 ALTERNATE BID #3
FIRST FLOOR PLAN - HEATING NEW WORK - AREA A
SCALE: 1/8" = 1'-0"

NORTH

PIPING NOTES

1. ALL HWS/R AND CHWS/R WITHOUT PIPE SIZES INDICATED ON PLANS SHALL BE 3/4".
2. IT SHALL BE THE CONTRACTORS RESPONSIBILITY TO REMOVE AND REINSTALL PORTIONS OF THE CEILING TILE AND GRID (WHICH IS NOT INDICATED ON THE ARCHITECTURAL DRAWINGS) AS REQUIRED TO PERFORM WORK OF THIS TRADE.

GENERAL NOTES

BASE BID

1. NO WORK – FIELDHOUSE HVAC EQUIPMENT, DUCTWORK, PIPING, ETC SHALL REMAIN AS IS.

ALTERNATE BID #3

1. EXISTING ROOF TOP UNITS SERVING FIELD HOUSE SHALL BE UPGRADED TO PROVIDE AIR-CONDITIONING BY INSTALLING ROOF MOUNTED CONDENSING UNITS ADJACENT TO EACH RTU AND PROVIDING REFRIGERANT PIPING AS INDICATED ON DRAWINGS.
2. IN ADDITION TO AIR-CONDITIONING, IT IS ALSO REQUIRED TO PROVIDE DUCT MOUNTED HOT WATER REHEAT COILS IN THE EXISTING SUPPLY DUCTWORK AND FURNISH AND INSTALL ALL HWS/R PIPING AS INDICATED ON DRAWINGS.

HEATING KEYED NOTES:

1. FURNISH AND INSTALL NEW HOT WATER REHEAT COIL W/ 2-WAY VALVE AND ASSOCIATED HWS/R PIPING AS INDICATED ON DRAWINGS. SEE DETAIL 3/H403.
2. FURNISH AND INSTALL NEW HOT WATER REHEAT COIL W/ 3-WAY VALVE AND ASSOCIATED HWS/R PIPING AS INDICATED ON DRAWINGS, SEE DETAILS, 2/H403.

ADD #1

INDIVIDUAL KEYED NOTE TAGS HAVE BEEN ADDED THAT WERE MISSING FROM ORIGINAL DRAWING ISSUED FOR BIDDING.

ADD #1

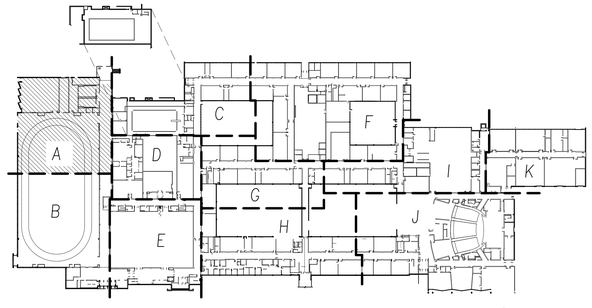

KEY PLAN
SCALE: NOT TO SCALE

NORTH

DATE: 2/21/2022

KEITH Engineering Design
www.keithmep.com
707 NE Jefferson Ave
Peoria, IL 61603
309 / 688-4005 : office
309 / 214-0063 : fax

ROCKFORD PUBLIC SCHOOLS
Saavedra Group Architects
504 N CHURCH STREET
ROCKFORD, ILLINOIS 61103

FEHR GRAHAM
ENGINEERING & ENVIRONMENTAL
230 WOODLAWN AVENUE
AURORA, ILLINOIS 60506

No.	Date	Revisions
1	3/17/2022	ADDENDUM 1

GUILFORD HIGH SCHOOL
HVAC UPGRADE
ROCKFORD, ILLINOIS

Sheet Title:
FIRST FLOOR PLAN - HEATING
NEW WORK - AREA A
ALTERNATE BID #3

Proj. No.: 2251
Date: 02/21/2022
Drawn: GBW
Approved: RCR
Sheet No.: H11A.A

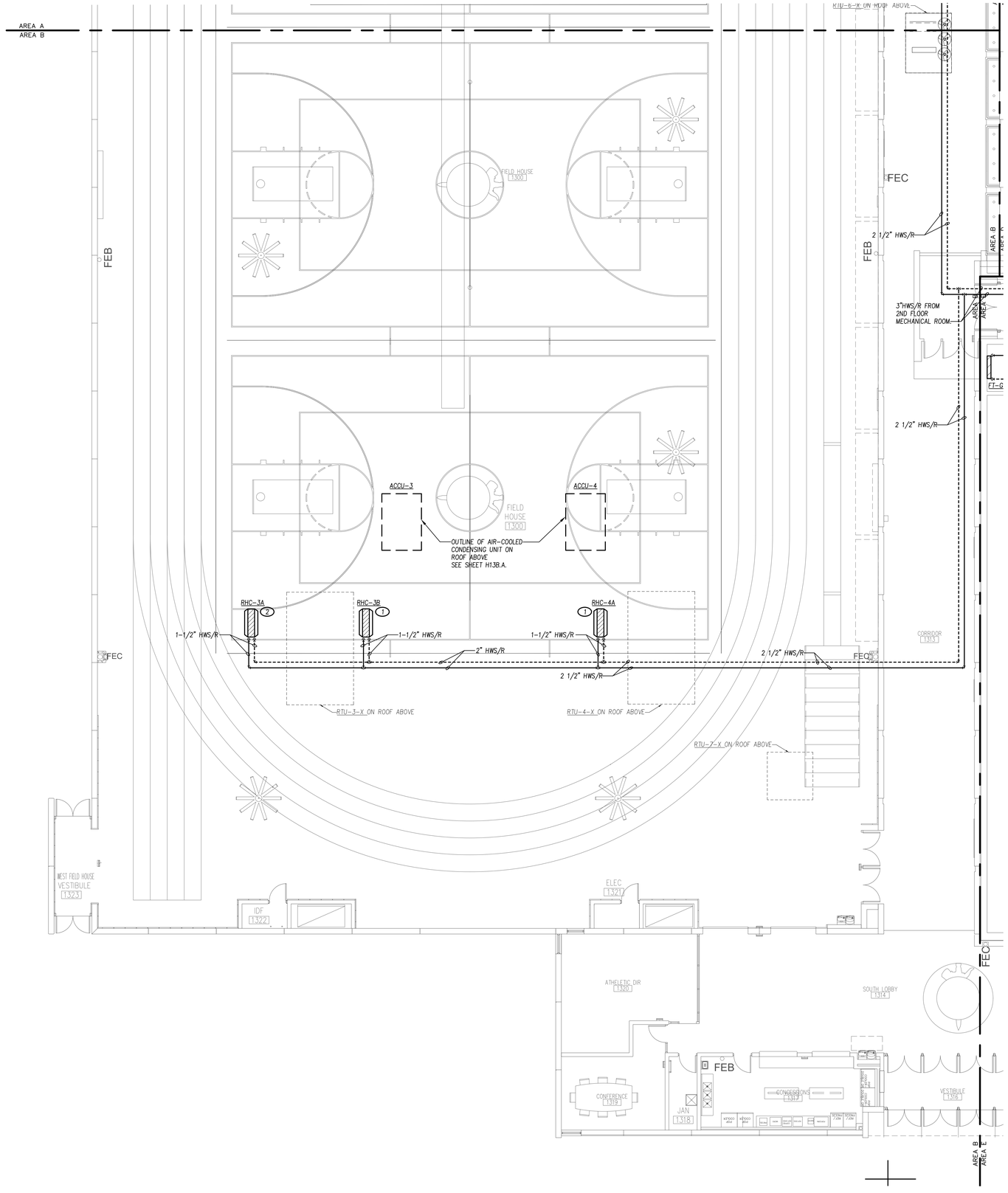

PIPING NOTES

1. ALL HWS/R AND CHWS/R WITHOUT PIPE SIZES INDICATED ON PLANS SHALL BE 3/4".
2. IT SHALL BE THE CONTRACTORS RESPONSIBILITY TO REMOVE AND REINSTALL PORTIONS OF THE CEILING TILE AND GRID (WHICH IS NOT INDICATED ON THE ARCHITECTURAL DRAWINGS) AS REQUIRED TO PERFORM WORK OF THIS TRADE.

GENERAL NOTES

BASE BID

1. NO WORK – FIELDHOUSE HVAC EQUIPMENT, DUCTWORK, PIPING, ETC SHALL REMAIN AS IS.

ALTERNATE BID #3

1. EXISTING ROOF TOP UNITS SERVING FIELD HOUSE SHALL BE UPGRADED TO PROVIDE AIR-CONDITIONING BY INSTALLING ROOF MOUNTED CONDENSING UNITS ADJACENT TO EACH RTU AND PROVIDING REFRIGERANT PIPING AS INDICATED ON DRAWNGS.
2. IN ADDITION TO AIR-CONDITIONING, IT IS ALSO REQUIRED TO PROVIDE DUCT MOUNTED HOT WATER REHEAT COILS IN THE EXISTING SUPPLY DUCTWORK AND FURNISH AND INSTALL ALL HWS/R PIPING AS INDICATED ON DRAWINGS.

HEATING KEYED NOTES:

1. FURNISH AND INSTALL NEW HOT WATER REHEAT COIL W/ 2-WAY VALVE AND ASSOCIATED HWS/R PIPING AS INDICATED ON DRAWINGS. SEE DETAIL 3/H403.
2. FURNISH AND INSTALL NEW HOT WATER REHEAT COIL W/ 3-WAY VALVE AND ASSOCIATED HWS/R PIPING AS INDICATED ON DRAWINGS, SEE DETAILS, 2/H403.

ADD #1

INDIVIDUAL KEYED NOTE TAGS HAVE BEEN ADDED THAT WERE MISSING FROM ORIGINAL DRAWING ISSUED FOR BIDDING.

ADD #1

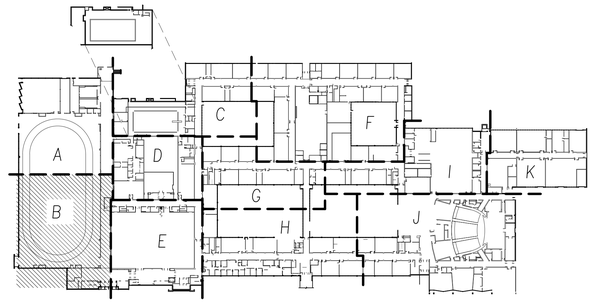

KEY PLAN
SCALE: NOT TO SCALE

NORTH

1 ALTERNATE BID #3
FIRST FLOOR PLAN - HEATING NEW WORK - AREA B
SCALE: 1/8" = 1'-0"

NORTH

DATE: 2/21/2022

KEITH Engineering Design
www.keithmep.com
309.808.4000 office
309.214.4063 fax
701 NE Jefferson Ave
Peoria, IL 61603

ROCKFORD PUBLIC SCHOOLS
FEHR GRAHAM
ENGINEERING & ENVIRONMENTAL
230 WOODLAWN AVENUE
AURORA, ILLINOIS 60506
Saavedra Group Architects
504 N. CHURCH STREET
ROCKFORD, ILLINOIS 61103

No.	Date	Revisions
1	3/17/2022	ADDENDUM 1

GUILFORD HIGH SCHOOL
HVAC UPGRADE
ROCKFORD, ILLINOIS

Sheet Title:
FIRST FLOOR PLAN - HEATING
NEW WORK - AREA B
ALTERNATE BID #3

Proj. No.: 2251
Date: 02/21/2022
Drawn: GBW
Approved: RCR
Sheet No.: H11B.A

PIPING NOTES

1. ALL HWS/R AND CHWS/R WITHOUT PIPE SIZES INDICATED ON PLANS SHALL BE 3/4".
2. IT SHALL BE THE CONTRACTORS RESPONSIBILITY TO REMOVE AND REINSTALL PORTIONS OF THE CEILING TILE AND GRID (WHICH IS NOT INDICATED ON THE ARCHITECTURAL DRAWINGS) AS REQUIRED TO PERFORM WORK OF THIS TRADE.

GENERAL NOTES

BASE BID

1. REMOVE DX COILS FROM EXISTING UNIT VENTILATORS AND INSTALL OWNER FURNISHED CHW COIL CONVERSION KIT IN EACH UNIT VENTILATOR.
2. FURNISH AND INSTALL NEW CHILLED WATER SYSTEM AS INDICATED ON PLANS.
3. WHERE EXISTING OCCUPIED SPACES LACK VENTILATION AND/OR AIR-CONDITIONING THE HEATING SYSTEM MAY BE REVISED TO PROVIDE FOR VENTILATION AND AIR-CONDITIONING. REFER TO KEYED NOTES ON PLANS.

ALTERNATE BID #1

1. ALL EXISTING HEATING HOT WATER SUPPLY/RETURN PIPING AND HEATING EQUIPMENT TO BE REMOVED AND REPLACED AS INDICATED ON DRAWINGS.
2. REFER TO DRAWING H11C.A FOR NEW HEATING WORK UNDER ALTERNATE BID #1.

HEATING KEYED NOTES:

1. INSTALL NEW OWNER-FURNISHED CHILLED WATER COIL INTO EXISTING UNIT VENTILATOR. PROVIDE ALL MATERIAL AND LABOR TO INSTALL NEW COIL IN ACCORDANCE WITH MANUFACTURERS INSTALLATION INSTRUCTIONS. SEE DETAIL 1/H403 AND 4/H403
2. FURNISH AND INSTALL NEW VERTICAL FAN COIL UNIT, AND ASSOCIATED CHWS/R AND HWS/R PIPING AS INDICATED ON DRAWINGS, SEE DETAIL 1/H403.
3. FURNISH AND INSTALL PRE-MANUFACTURED PIPING ENCLOSURE (VULCAN MODEL LV4-T20 WO/LOUVERS OR APPROVED EQUALS) AS REQUIRED TO CONCEAL NEW PIPING. PROVIDE NEW HANGERS, CLIPS, END CAPS, ETC. SUBMIT PRE-FINISHED PIPE ENCLOSURE COLOR SAMPLES TO BE APPROVED BY ARCHITECT.
4. PROVIDE ALL MATERIAL AND LABOR TO REMOVE AND RE-INSTALL PIPING ENCLOSURE TO EXISTING UNIT VENTILATORS AND CUT AN OPENING IN EXISTING ENCLOSURE TO ALLOW FOR THE INSTALLATION OF NEW CHILLED WATER PIPING INTO EXISTING PIPING ENCLOSURE.

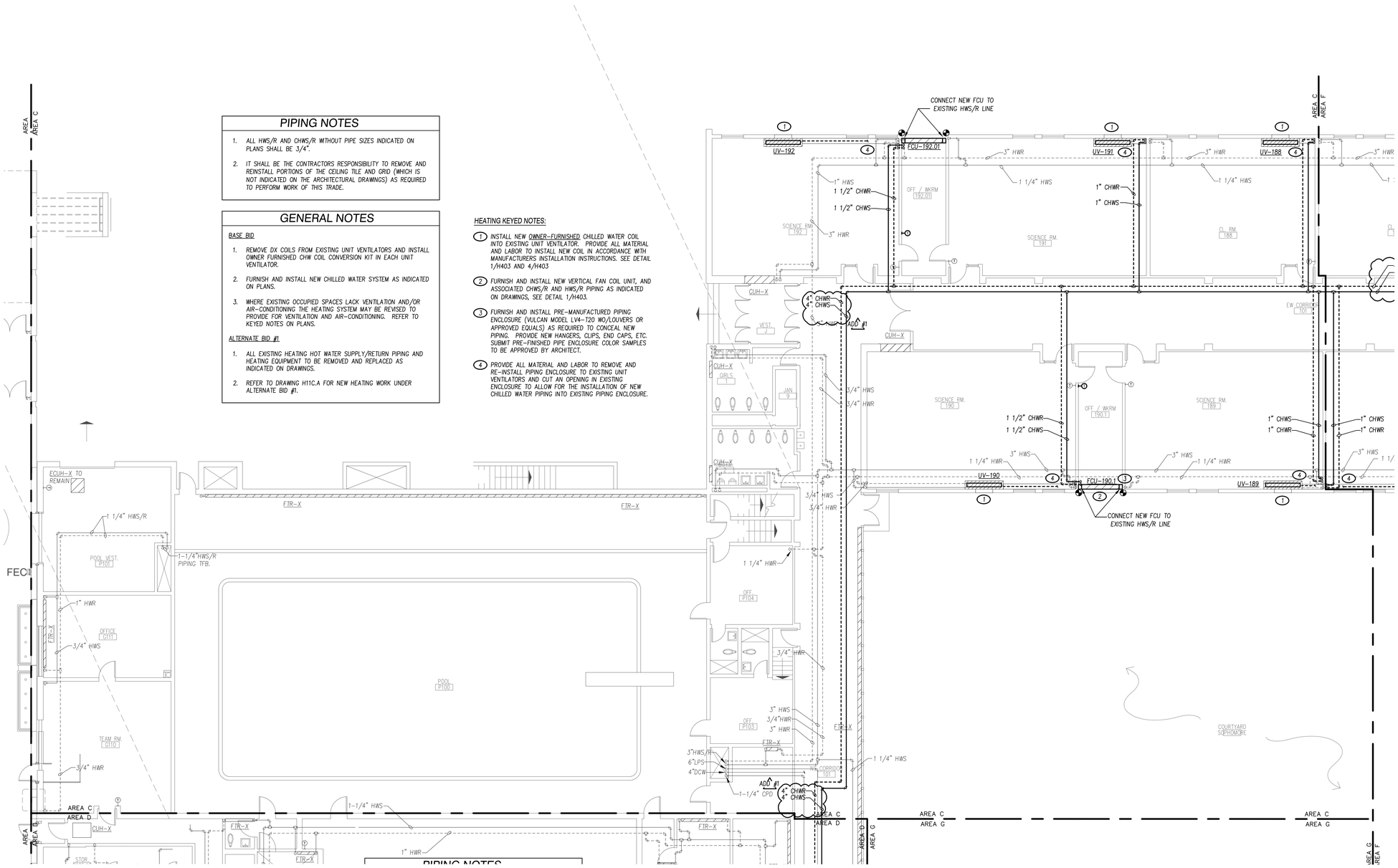

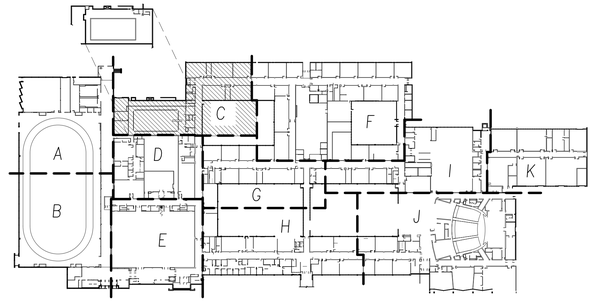

1 FIRST FLOOR PLAN - HEATING NEW WORK - AREA C
SCALE: 1/8" = 1'-0"

NORTH

KEY PLAN
SCALE: NOT TO SCALE

NORTH

DATE: 2/21/2022

KEITH Engineering Design
www.keithmep.com
707 NE Jefferson Ave
Peoria, IL 61603
309 / 698-4005 : office
309 / 214-0063 : fax

ROCKFORD PUBLIC SCHOOLS
FEHR GRAHAM ENGINEERING & ENVIRONMENTAL
230 WOODLAWN AVENUE
AURORA, ILLINOIS 60506
Saavedra Group Architects
504 N CHURCH STREET
ROCKFORD, ILLINOIS 61103

No.	Date	Revisions
1	3/17/2022	ADDENDUM 1

GUILFORD HIGH SCHOOL
HVAC UPGRADE
ROCKFORD, ILLINOIS

Sheet Title:
FIRST FLOOR PLAN - HEATING NEW WORK - AREA C

Proj. No.: 2251
Date: 02/21/2022
Drawn: GBW
Approved: RCR
Sheet No.: H11C

INDIVIDUAL KEYED NOTE TAGS HAVE BEEN ADDED THAT WERE MISSING FROM ORIGINAL DRAWING ISSUED FOR BIDDING.

ADD #1

PIPING NOTES

1. ALL HWS/R AND CHWS/R WITHOUT PIPE SIZES INDICATED ON PLANS SHALL BE 3/4".
2. IT SHALL BE THE CONTRACTORS RESPONSIBILITY TO REMOVE AND REINSTALL PORTIONS OF THE CEILING TILE AND GRID (WHICH IS NOT INDICATED ON THE ARCHITECTURAL DRAWINGS) AS REQUIRED TO PERFORM WORK OF THIS TRADE.

GENERAL NOTES

BASE BID

1. REMOVE DX COILS FROM EXISTING UNIT VENTILATORS AND INSTALL OWNER FURNISHED CHW COIL CONVERSION KIT IN EACH UNIT VENTILATOR.
2. FURNISH AND INSTALL NEW CHILLED WATER SYSTEM AS INDICATED ON PLANS.
3. WHERE EXISTING OCCUPIED SPACES LACK VENTILATION AND/OR AIR-CONDITIONING THE HEATING SYSTEM MAY BE REVISED TO PROVIDE FOR VENTILATION AND AIR-CONDITIONING. REFER TO KEYED NOTES ON PLANS.

ALTERNATE BID #1

1. PROVIDE FOR A COMPREHENSIVE REPLACEMENT OF ENTIRE HEATING SYSTEM OUTSIDE OF EXISTING BOILER ROOM. ALL EXISTING ACCESSIBLE HEATING HOT WATER SUPPLY AND RETURN PIPING SHALL BE REMOVED AND REPLACED PER THE DRAWINGS.
2. ALL EXISTING HEATING UNITS SUCH AS FINNED TUBE RADIATORS, CABINET UNIT HEATERS, AND HOT WATER CONVECTORS SHALL BE REPLACED AS PART OF THE COMPREHENSIVE HEATING SYSTEM REPLACEMENT.
3. ALL EXISTING ACCESSIBLE PNEUMATIC CONTROL TUBING AND PNEUMATIC MAIN AIR TUBING OUTSIDE THE BOILER ROOM IS TO BE REMOVED IN ITS ENTIRETY. (EXCEPTION: EXISTING MAIN CONTROL AIR TO POOL EQUIPMENT ROOM SHALL REMAIN.) UNDER ALTERNATE BID #1, ALL EXISTING HVAC EQUIPMENT WILL BE CONVERTED TO DDC CONTROL WITH ELECTRIC ACTUATION.
4. LOW PRESSURE STEAM AND CONDENSATE RETURN PIPING SYSTEMS SERVING THE POOL EQUIPMENT ROOM SHALL REMAIN.
5. NOTE: BID ALL EXISTING NOTE: THE ALTERNATE BID DRAWINGS INCLUDE BOTH BASE BID WORK AND ALTERNATE BID #1 WORK.

HEATING KEYED NOTES:

1. INSTALL NEW OWNER-FURNISHED CHILLED WATER COIL INTO EXISTING UNIT VENTILATOR. PROVIDE ALL MATERIAL AND LABOR TO INSTALL NEW COIL IN ACCORDANCE WITH MANUFACTURERS INSTALLATION INSTRUCTIONS. SEE DETAIL 1/H403 AND 4/H403.
2. PROVIDE ALL MATERIAL AND LABOR TO REMOVE AND RE-INSTALL PIPING ENCLOSURE TO EXISTING UNIT VENTILATORS AND CUT AN OPENING IN EXISTING ENCLOSURE TO ALLOW FOR THE INSTALLATION OF NEW CHILLED WATER PIPING INTO EXISTING PIPING ENCLOSURE.
3. FURNISH AND INSTALL PRE-MANUFACTURED PIPING ENCLOSURE (VULCAN MODEL LV4-T20 WO/LOUVERS OR APPROVED EQUALS) AS REQUIRED TO CONCEAL NEW PIPING. PROVIDE NEW HANGERS, CLIPS, END CAPS, ETC. SUBMIT PRE-FINISHED PIPE ENCLOSURE COLOR SAMPLES TO BE APPROVED BY ARCHITECT.
4. FURNISH AND INSTALL NEW VERTICAL FAN COIL UNIT, AND ASSOCIATED CHWS/R AND HWS/R PIPING AS INDICATED ON DRAWINGS, SEE DETAIL 1/H403.
5. FURNISH AND INSTALL NEW FINNED TUBE RADIATOR/ RECESSED HOT WATER CONVECTOR AND ASSOCIATED HWS/R PIPING AS INDICATED ON DRAWINGS, SEE DETAIL 5/H403.
6. FURNISH AND INSTALL NEW RECESSED CABINET UNIT HEATER W/ 2-WAY VALVE AND ASSOCIATED HWS/R PIPING AS INDICATED ON DRAWINGS, SEE DETAILS, 3/H403.

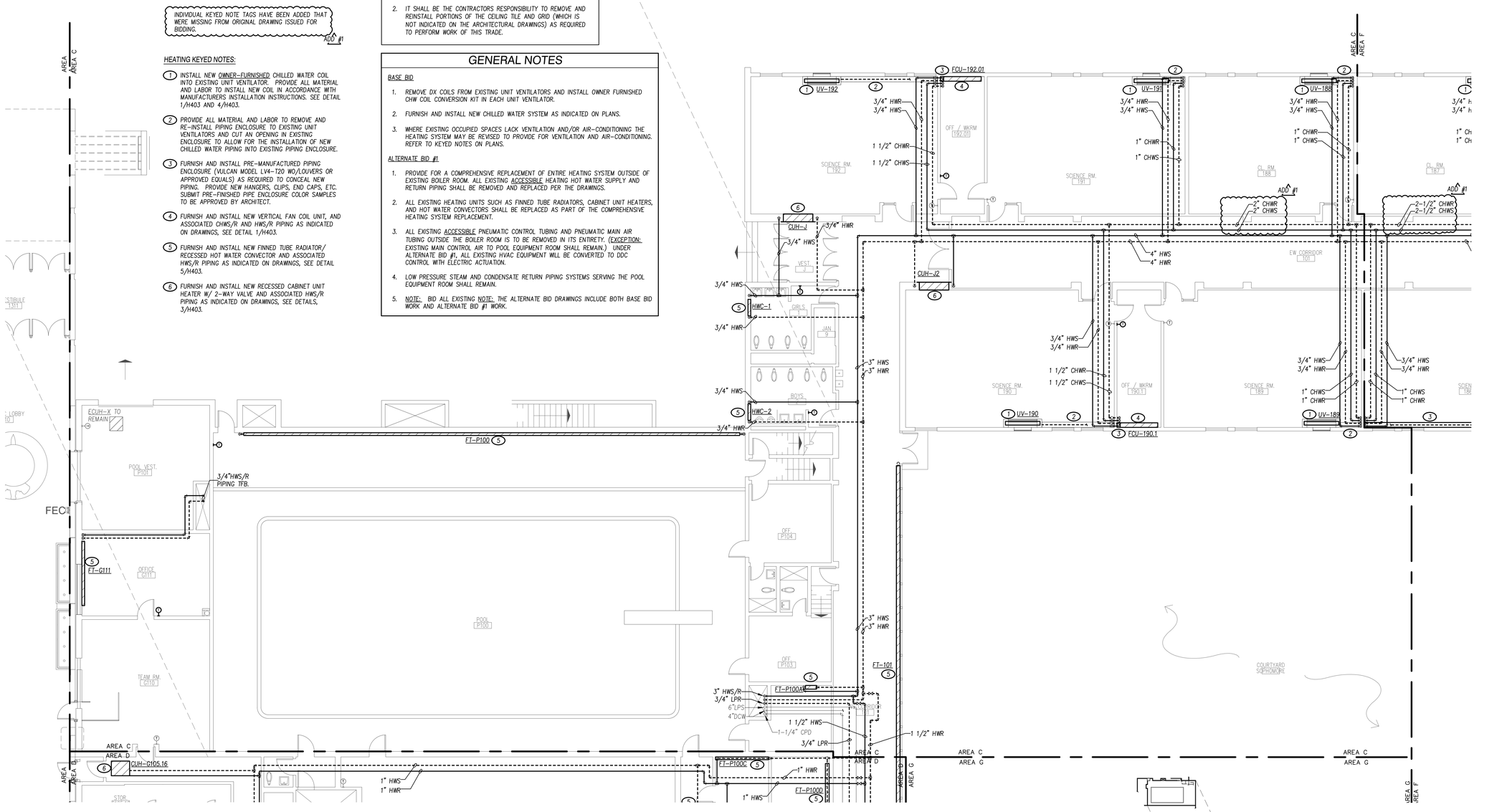

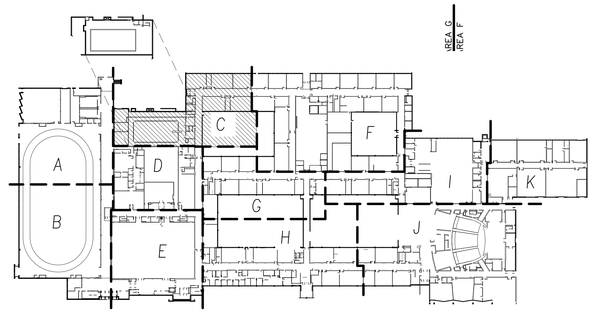

1 ALTERNATE BID # 1
FIRST FLOOR PLAN - HEATING NEW WORK - AREA C
SCALE: 1/8" = 1'-0"

NORTH

KEY PLAN
SCALE: NOT TO SCALE

NORTH

REG. PROFESSIONAL ENGINEER
STATE OF ILLINOIS
REF. 062-056761
EXPIRES: 11/30/2023
DATE: 2/21/2022

KEITH Engineering Design
www.keithmep.com
707 SE Jefferson Ave
Peoria, IL 61603
309.808.4000 - office
309.714.4063 - fax

FEHR GRAHAM
ENGINEERING & ENVIRONMENTAL
230 WOODLAWN AVENUE
AURORA, ILLINOIS 60506

Saavedra Group Architects
504 N. CHURCH STREET
ROCKFORD, ILLINOIS 61103

ROCKFORD PUBLIC SCHOOLS

No.	Date	Revisions
1	3/17/2022	ADDENDUM 1

GUILFORD HIGH SCHOOL
HVAC UPGRADE
ROCKFORD, ILLINOIS

Sheet Title:
FIRST FLOOR PLAN - HEATING
NEW WORK - AREA C
ALTERNATE BID # 1

Proj. No.: 2251
Date: 02/21/2022
Drawn: GBW
Approved: RCR
Sheet No.: H111C.A

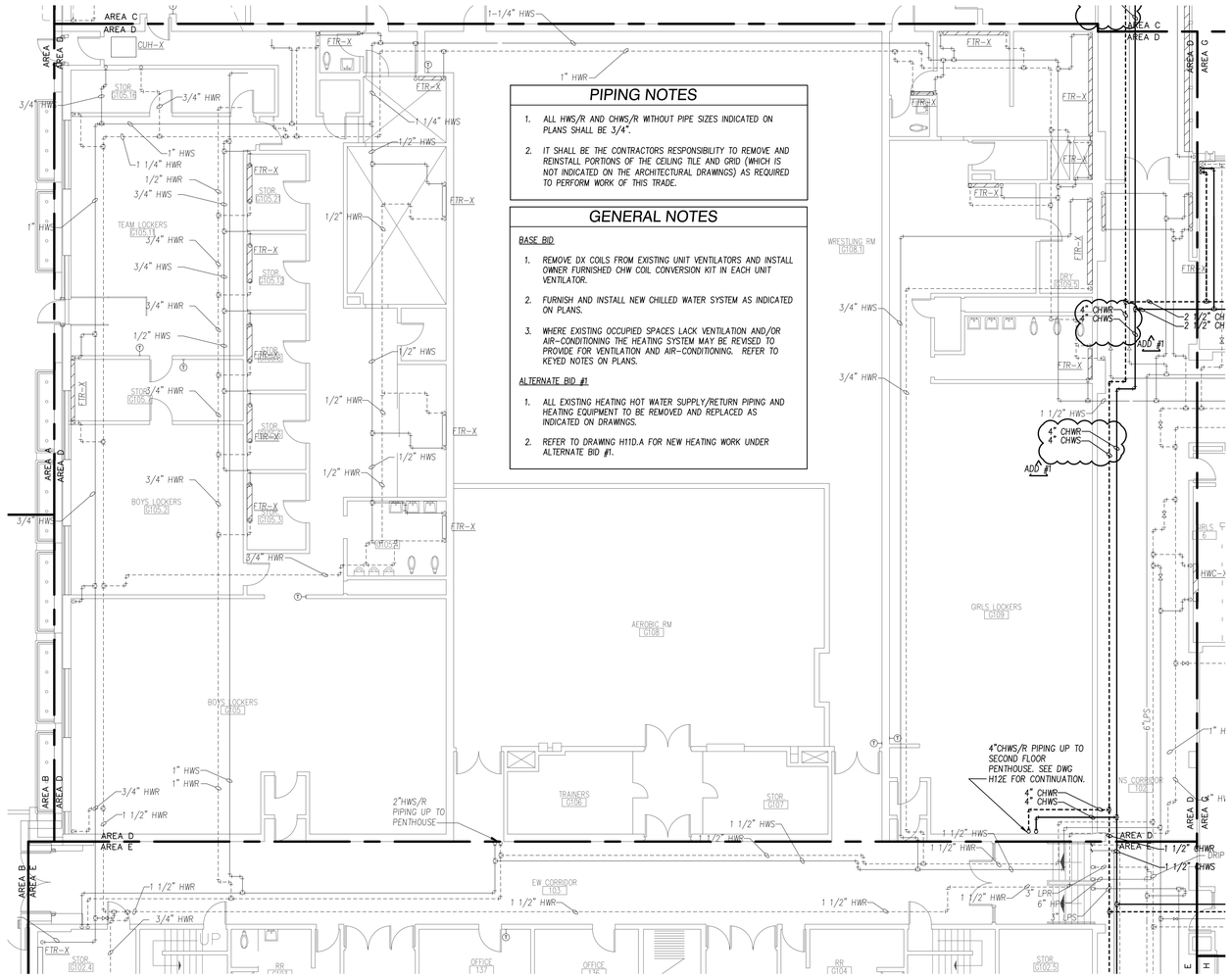

PIPING NOTES

1. ALL HWS/R AND CHWS/R WITHOUT PIPE SIZES INDICATED ON PLANS SHALL BE 3/4".
2. IT SHALL BE THE CONTRACTORS RESPONSIBILITY TO REMOVE AND REINSTALL PORTIONS OF THE CEILING TILE AND GRID (WHICH IS NOT INDICATED ON THE ARCHITECTURAL DRAWINGS) AS REQUIRED TO PERFORM WORK OF THIS TRADE.

GENERAL NOTES

BASE BID

1. REMOVE DX COILS FROM EXISTING UNIT VENTILATORS AND INSTALL OWNER FURNISHED CHW COIL CONVERSION KIT IN EACH UNIT VENTILATOR.
2. FURNISH AND INSTALL NEW CHILLED WATER SYSTEM AS INDICATED ON PLANS.
3. WHERE EXISTING OCCUPIED SPACES LACK VENTILATION AND/OR AIR-CONDITIONING THE HEATING SYSTEM MAY BE REVISED TO PROVIDE FOR VENTILATION AND AIR-CONDITIONING. REFER TO KEYED NOTES ON PLANS.

ALTERNATE BID #1

1. ALL EXISTING HEATING HOT WATER SUPPLY/RETURN PIPING AND HEATING EQUIPMENT TO BE REMOVED AND REPLACED AS INDICATED ON DRAWINGS.
2. REFER TO DRAWING H11D.A FOR NEW HEATING WORK UNDER ALTERNATE BID #1.

1 FIRST FLOOR PLAN - HEATING NEW WORK - AREA D
SCALE: 1/8" = 1'-0"

NORTH

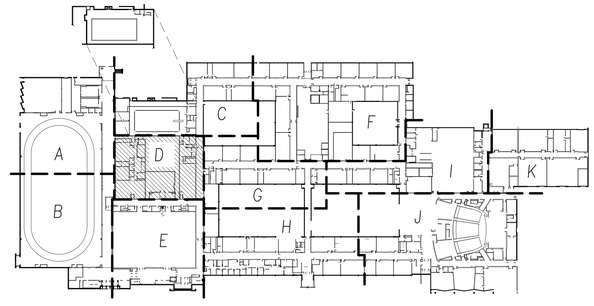

KEY PLAN
SCALE: NOT TO SCALE

NORTH

DATE: 2/21/2022

KEITH Engineering Design
www.keithmep.com
707 NE Jefferson Ave
Peoria, IL 61603
309/ 698-4005 : office
309/ 214-0063 : fax

ROCKFORD PUBLIC SCHOOLS
FEHR GRAHAM ENGINEERING & ENVIRONMENTAL
230 WOODLAWN AVENUE
AURORA, ILLINOIS 60506
Saavedra Group Architects
504 N CHURCH STREET
ROCKFORD, ILLINOIS 61103

No.	Date	Revisions
1	3/17/2022	ADDENDUM 1

GUILFORD HIGH SCHOOL
HVAC UPGRADE
ROCKFORD, ILLINOIS

Sheet Title:
FIRST FLOOR PLAN - HEATING NEW WORK - AREA D

Proj. No.: 2251
Date: 02/21/2022
Drawn: GBW
Approved: RCR
Sheet No.: H11D

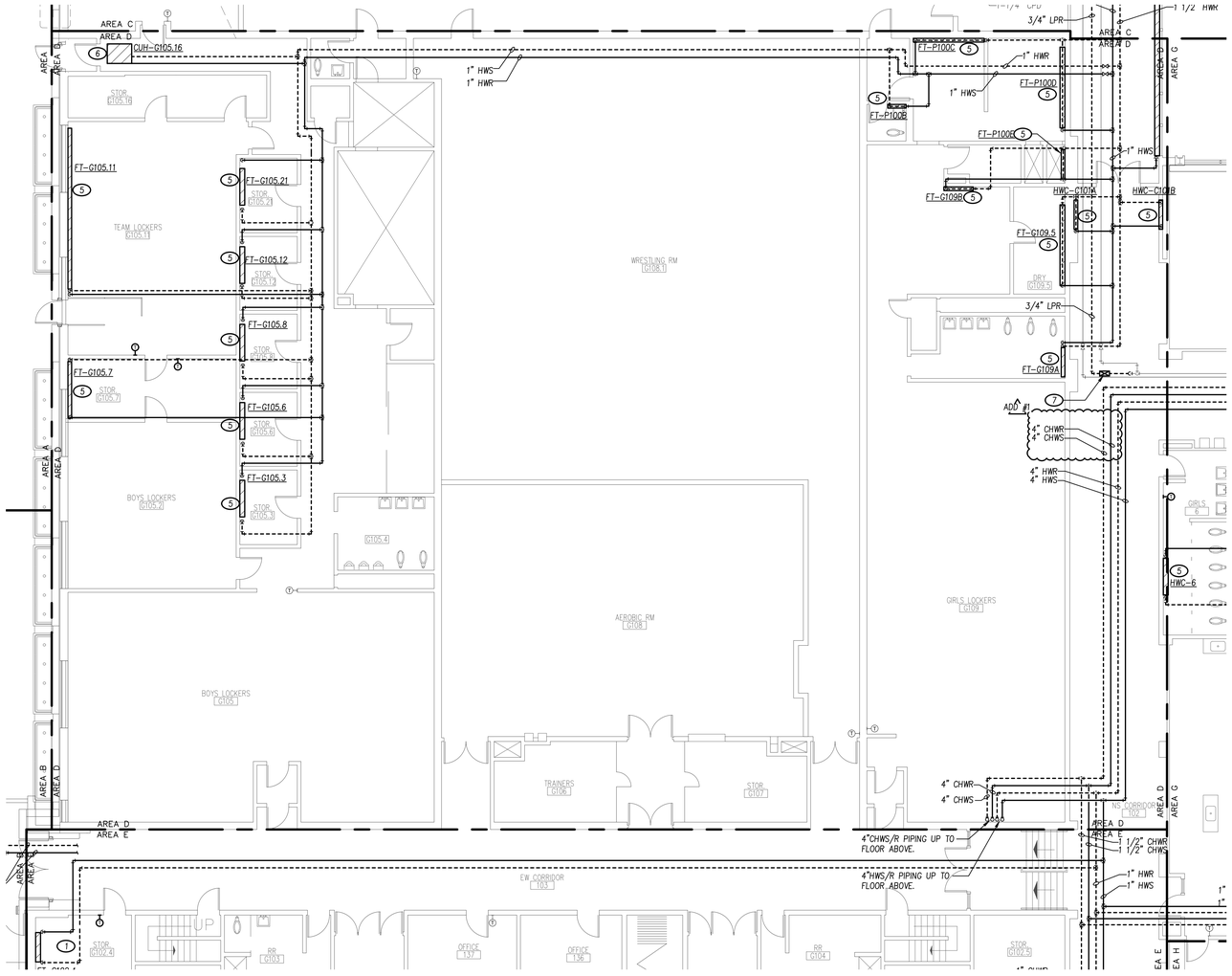

INDIVIDUAL KEYED NOTE TAGS HAVE BEEN ADDED THAT WERE MISSING FROM ORIGINAL DRAWING ISSUED FOR BIDDING.

ADD #1

HEATING KEYED NOTES:

1. INSTALL NEW OWNER-FURNISHED CHILLED WATER COIL INTO EXISTING UNIT VENTILATOR. PROVIDE ALL MATERIAL AND LABOR TO INSTALL NEW COIL IN ACCORDANCE WITH MANUFACTURERS INSTALLATION INSTRUCTIONS. SEE DETAIL 1/H403 AND 4/H403.
2. PROVIDE ALL MATERIAL AND LABOR TO REMOVE AND RE-INSTALL PIPING ENCLOSURE TO EXISTING UNIT VENTILATORS AND CUT AN OPENING IN EXISTING ENCLOSURE TO ALLOW FOR THE INSTALLATION OF NEW CHILLED WATER PIPING INTO EXISTING PIPING ENCLOSURE.
3. FURNISH AND INSTALL PRE-MANUFACTURED PIPING ENCLOSURE (VULCAN MODEL LV4-T20 WO/LOUVERS OR APPROVED EQUALS) AS REQUIRED TO CONCEAL NEW PIPING. PROVIDE NEW HANGERS, CLIPS, END CAPS, ETC. SUBMIT PRE-FINISHED PIPE ENCLOSURE COLOR SAMPLES TO BE APPROVED BY ARCHITECT.
4. FURNISH AND INSTALL NEW VERTICAL FAN COIL UNIT, AND ASSOCIATED CHWS/R AND HWS/R PIPING AS INDICATED ON DRAWINGS, SEE DETAIL 1/H403.
5. FURNISH AND INSTALL NEW FINNED TUBE RADIATOR/ RECESSED HOT WATER CONVECTOR AND ASSOCIATED HWS/R PIPING AS INDICATED ON DRAWINGS, SEE DETAIL 5/H403.
6. FURNISH AND INSTALL NEW RECESSED CABINET UNIT HEATER W/ 2-WAY VALVE AND ASSOCIATED HWS/R PIPING AS INDICATED ON DRAWINGS, SEE DETAILS, 3/H403.
7. FURNISH AND INSTALL DRIP TRAP ASSEMBLY AND END OF STEAM MAIN. SEE DETAIL 6/H402.

ADD #1

GENERAL NOTES

BASE BID

1. REMOVE DX COILS FROM EXISTING UNIT VENTILATORS AND INSTALL OWNER FURNISHED CHW COIL CONVERSION KIT IN EACH UNIT VENTILATOR.
2. FURNISH AND INSTALL NEW CHILLED WATER SYSTEM AS INDICATED ON PLANS.
3. WHERE EXISTING OCCUPIED SPACES LACK VENTILATION AND/OR AIR-CONDITIONING THE HEATING SYSTEM MAY BE REVISED TO PROVIDE FOR VENTILATION AND AIR-CONDITIONING. REFER TO KEYED NOTES ON PLANS.

ALTERNATE BID #1

1. PROVIDE FOR A COMPREHENSIVE REPLACEMENT OF ENTIRE HEATING SYSTEM OUTSIDE OF EXISTING BOILER ROOM. ALL EXISTING ACCESSIBLE HEATING HOT WATER SUPPLY AND RETURN PIPING SHALL BE REMOVED AND REPLACED PER THE DRAWINGS.
2. ALL EXISTING HEATING UNITS SUCH AS FINNED TUBE RADIATORS, CABINET UNIT HEATERS, AND HOT WATER CONVECTORS SHALL BE REPLACED AS PART OF THE COMPREHENSIVE HEATING SYSTEM REPLACEMENT.
3. ALL EXISTING ACCESSIBLE PNEUMATIC CONTROL TUBING AND PNEUMATIC MAIN AIR TUBING OUTSIDE THE BOILER ROOM IS TO BE REMOVED IN ITS ENTIRETY. (EXCEPTION: EXISTING MAIN CONTROL AIR TO POOL EQUIPMENT ROOM SHALL REMAIN.) UNDER ALTERNATE BID #1, ALL EXISTING HVAC EQUIPMENT WILL BE CONVERTED TO DDC CONTROL WITH ELECTRIC ACTUATION.
4. LOW PRESSURE STEAM AND CONDENSATE RETURN PIPING SYSTEMS SERVING THE POOL EQUIPMENT ROOM SHALL REMAIN.
5. NOTE: BID ALL EXISTING NOTE: THE ALTERNATE BID DRAWINGS INCLUDE BOTH BASE BID WORK AND ALTERNATE BID #1 WORK.

PIPING NOTES

1. ALL HWS/R AND CHWS/R WITHOUT PIPE SIZES INDICATED ON PLANS SHALL BE 3/4".
2. IT SHALL BE THE CONTRACTORS RESPONSIBILITY TO REMOVE AND REINSTALL PORTIONS OF THE CEILING TILE AND GRID (WHICH IS NOT INDICATED ON THE ARCHITECTURAL DRAWINGS) AS REQUIRED TO PERFORM WORK OF THIS TRADE.

1 ALTERNATE BID # 1
FIRST FLOOR PLAN - HEATING NEW WORK - AREA D
SCALE: 1/8" = 1'-0"

NORTH

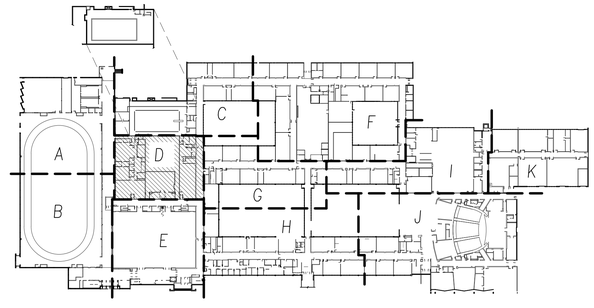

KEY PLAN
SCALE: NOT TO SCALE

NORTH

DATE: 2/21/2022

KEITH Engineering Design
www.keithmep.com
707 SE Jefferson Ave
Peoria, IL 61603
309 / 808-4000 - office
309 / 214-4060 - fax

ROCKFORD PUBLIC SCHOOLS

FEHR GRAHAM
ENGINEERING & ENVIRONMENTAL
230 WOODLAWN AVENUE
AURORA, ILLINOIS 60506

Saavedra Group Architects
504 W. CHURCH STREET
ROCKFORD, ILLINOIS 61103

No.	Date	Revisions
1	3/17/2022	ADDENDUM 1

GUILFORD HIGH SCHOOL
HVAC UPGRADE
ROCKFORD, ILLINOIS

Sheet Title:
FIRST FLOOR PLAN - HEATING
NEW WORK - AREA D
ALTERNATE BID # 1

Proj. No.:	2251
Date:	02/21/2022
Drawn:	GBW
Approved:	RCR
Sheet No.:	H111D.A

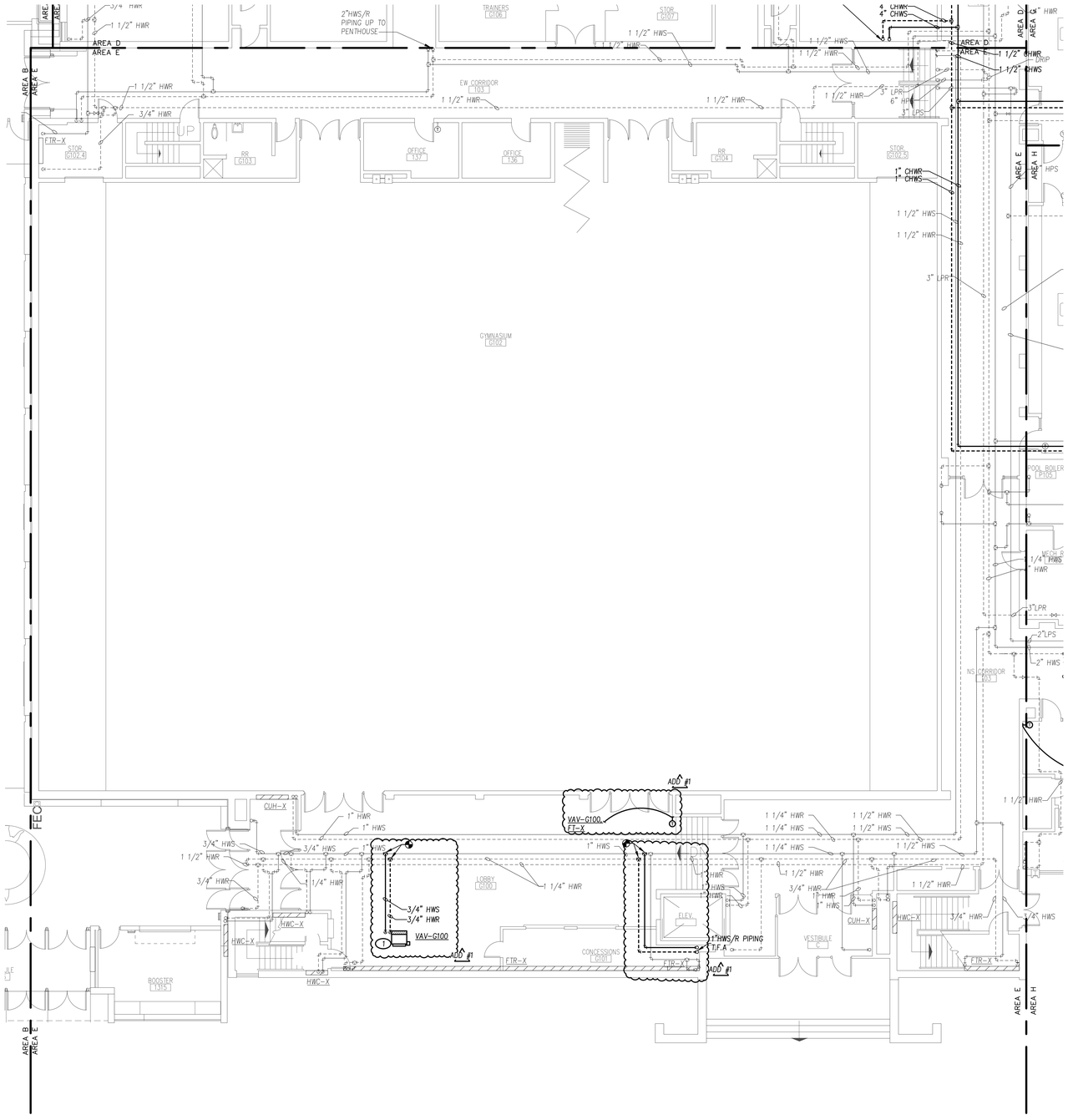

GENERAL NOTES

BASE BID

1. REMOVE DX COILS FROM EXISTING UNIT VENTILATORS AND INSTALL OWNER FURNISHED CHW COIL CONVERSION KIT IN EACH UNIT VENTILATOR.
2. FURNISH AND INSTALL NEW CHILLED WATER SYSTEM AS INDICATED ON PLANS.
3. WHERE EXISTING OCCUPIED SPACES LACK VENTILATION AND/OR AIR-CONDITIONING THE HEATING SYSTEM MAY BE REVISED TO PROVIDE FOR VENTILATION AND AIR-CONDITIONING. REFER TO KEYED NOTES ON PLANS.

ALTERNATE BID #1

1. ALL EXISTING HEATING HOT WATER SUPPLY/RETURN PIPING AND HEATING EQUIPMENT TO BE REMOVED AND REPLACED AS INDICATED ON DRAWINGS.
2. REFER TO DRAWING H11E.A FOR NEW HEATING WORK UNDER ALTERNATE BID #1.

PIPING NOTES

1. ALL HWS/R AND CHWS/R WITHOUT PIPE SIZES INDICATED ON PLANS SHALL BE 3/4".
2. IT SHALL BE THE CONTRACTORS RESPONSIBILITY TO REMOVE AND REINSTALL PORTIONS OF THE CEILING TILE AND GRID (WHICH IS NOT INDICATED ON THE ARCHITECTURAL DRAWINGS) AS REQUIRED TO PERFORM WORK OF THIS TRADE.

HEATING KEYED NOTES:

1. FURNISH AND INSTALL NEW HOT WATER REHEAT VARIABLE AIR VOLUME BOX W/ 3-WAY VALVE AND ASSOCIATED HWS/R PIPING AS INDICATED ON DRAWINGS. SEE DETAIL 2/H403

1 FIRST FLOOR PLAN - HEATING NEW WORK - AREA E
SCALE: 1/8" = 1'-0"

NORTH

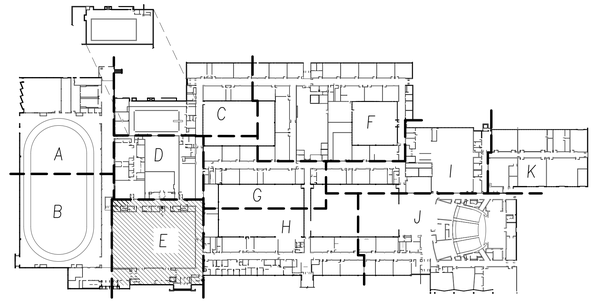

KEY PLAN
SCALE: NOT TO SCALE

NORTH

REG. PROFESSIONAL ENGINEER
REF: 062-056761
STATE OF ILLINOIS
DATE: 2/21/2022

KEITH Engineering Design
www.keithmep.com
707 SE Jefferson Ave. Suite 1
Peoria, IL 61603
309.808.4000 office
309.714.4063 fax

ROCKFORD PUBLIC SCHOOLS
FEHR GRAHAM ENGINEERING & ENVIRONMENTAL
230 WOODLAWN AVENUE
AURORA, ILLINOIS 60506
Saavedra Group Architects
504 W. CHURCH STREET
ROCKFORD, ILLINOIS 61103

Revisions

No.	Date	
1	3/17/2022	ADDENDUM 1

GUILFORD HIGH SCHOOL
HVAC UPGRADE
ROCKFORD, ILLINOIS

Sheet Title:
FIRST FLOOR PLAN - HEATING
NEW WORK - AREA E

Proj. No.:	2251
Date:	02/21/2022
Drawn:	GBW
Approved:	RCR
Sheet No.:	H11E

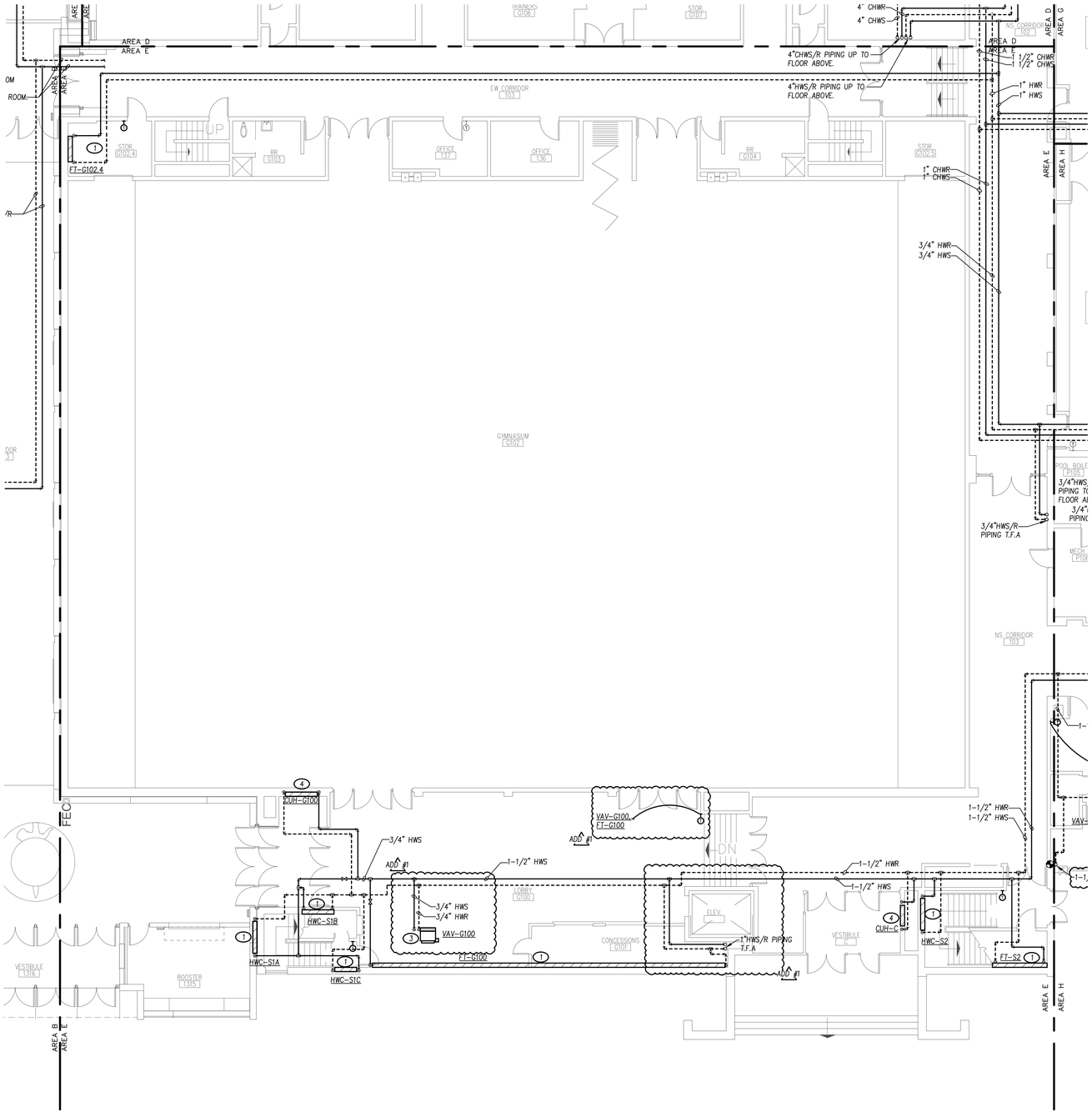

1 ALTERNATE BID # 1
FIRST FLOOR PLAN - HEATING NEW WORK - AREA E
SCALE: 1/8" = 1'-0"

NORTH

INDIVIDUAL KEYED NOTE TAGS HAVE BEEN ADDED THAT WERE MISSING FROM ORIGINAL DRAWING ISSUED FOR BIDDING.
ADD #1

HEATING KEYED NOTES:

1. FURNISH AND INSTALL NEW FINNED TUBE RADIATOR/ RECESSED HOT WATER CONVECTOR AND ASSOCIATED HWS/R PIPING AS INDICATED ON DRAWINGS, SEE DETAIL 5/H403.
2. FURNISH AND INSTALL NEW HOT WATER REHEAT VARIABLE AIR VOLUME BOX W/ 2-WAY VALVE AND ASSOCIATED HWS/R PIPING AS INDICATED ON DRAWINGS. SEE DETAIL 3/H403.
3. FURNISH AND INSTALL NEW HOT WATER REHEAT VARIABLE AIR VOLUME BOX W/ 3-WAY VALVE AND ASSOCIATED HWS/R PIPING AS INDICATED ON DRAWINGS, SEE DETAILS, 2/H403.
4. FURNISH AND INSTALL NEW CABINET UNIT HEATER W/ 2-WAY VALVE AND ASSOCIATED HWS/R PIPING AS INDICATED ON DRAWINGS, SEE DETAILS, 3/H403.

GENERAL NOTES

BASE BID

1. REMOVE DX COILS FROM EXISTING UNIT VENTILATORS AND INSTALL OWNER FURNISHED CHW COIL CONVERSION KIT IN EACH UNIT VENTILATOR.
2. FURNISH AND INSTALL NEW CHILLED WATER SYSTEM AS INDICATED ON PLANS.
3. WHERE EXISTING OCCUPIED SPACES LACK VENTILATION AND/OR AIR-CONDITIONING THE HEATING SYSTEM MAY BE REVISED TO PROVIDE FOR VENTILATION AND AIR-CONDITIONING. REFER TO KEYED NOTES ON PLANS.

ALTERNATE BID #1

1. PROVIDE FOR A COMPREHENSIVE REPLACEMENT OF ENTIRE HEATING SYSTEM OUTSIDE OF EXISTING BOILER ROOM. ALL EXISTING ACCESSIBLE HEATING HOT WATER SUPPLY AND RETURN PIPING SHALL BE REMOVED AND REPLACED PER THE DRAWINGS.
2. ALL EXISTING HEATING UNITS SUCH AS FINNED TUBE RADIATORS, CABINET UNIT HEATERS, AND HOT WATER CONVECTORS SHALL BE REPLACED AS PART OF THE COMPREHENSIVE HEATING SYSTEM REPLACEMENT.
3. ALL EXISTING ACCESSIBLE PNEUMATIC CONTROL TUBING AND PNEUMATIC MAIN AIR TUBING OUTSIDE THE BOILER ROOM IS TO BE REMOVED IN ITS ENTIRETY. (EXCEPTION: EXISTING MAIN CONTROL AIR TO POOL EQUIPMENT ROOM SHALL REMAIN.) UNDER ALTERNATE BID #1, ALL EXISTING HVAC EQUIPMENT WILL BE CONVERTED TO DDC CONTROL WITH ELECTRIC ACTUATION.
4. LOW PRESSURE STEAM AND CONDENSATE RETURN PIPING SYSTEMS SERVING THE POOL EQUIPMENT ROOM SHALL REMAIN.
5. NOTE: BID ALL EXISTING NOTE: THE ALTERNATE BID DRAWINGS INCLUDE BOTH BASE BID WORK AND ALTERNATE BID #1 WORK.

PIPING NOTES

1. ALL HWS/R AND CHWS/R WITHOUT PIPE SIZES INDICATED ON PLANS SHALL BE 3/4".
2. IT SHALL BE THE CONTRACTORS RESPONSIBILITY TO REMOVE AND REINSTALL PORTIONS OF THE CEILING TILE AND GRID (WHICH IS NOT INDICATED ON THE ARCHITECTURAL DRAWINGS) AS REQUIRED TO PERFORM WORK OF THIS TRADE.

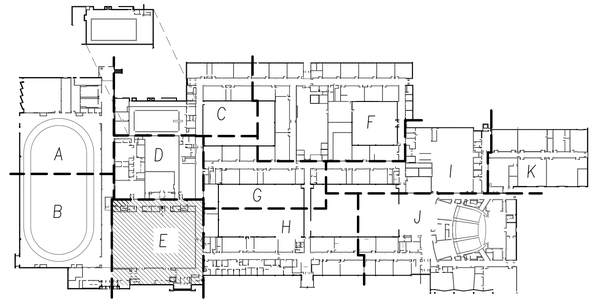

KEY PLAN
SCALE: NOT TO SCALE

NORTH

REG. PROFESSIONAL ENGINEER
REG. NO. 062-056761
STATE OF ILLINOIS
DATE: 2/21/2022

KEITH Engineering Design
www.keithmep.com
707 SE Jefferson Ave. Suite 100, Peoria, IL 61603
309.1656.4000 office
309.214.4063 fax

ROCKFORD PUBLIC SCHOOLS
FEHR GRAHAM ENGINEERING & ENVIRONMENTAL
230 WOODLAWN AVENUE AURORA, ILLINOIS 60506
Saavedra Group Architects
504 N. CHURCH STREET ROCKFORD, ILLINOIS 61103

No.	Date	Revisions
1	3/17/2022	ADDENDUM 1

GUILFORD HIGH SCHOOL
HVAC UPGRADE
ROCKFORD, ILLINOIS

Sheet Title:
FIRST FLOOR PLAN - HEATING
NEW WORK - AREA E
ALTERNATE BID # 1

Proj. No.: 2251
Date: 02/21/2022
Drawn: GBW
Approved: RCR
Sheet No.: H111E.A

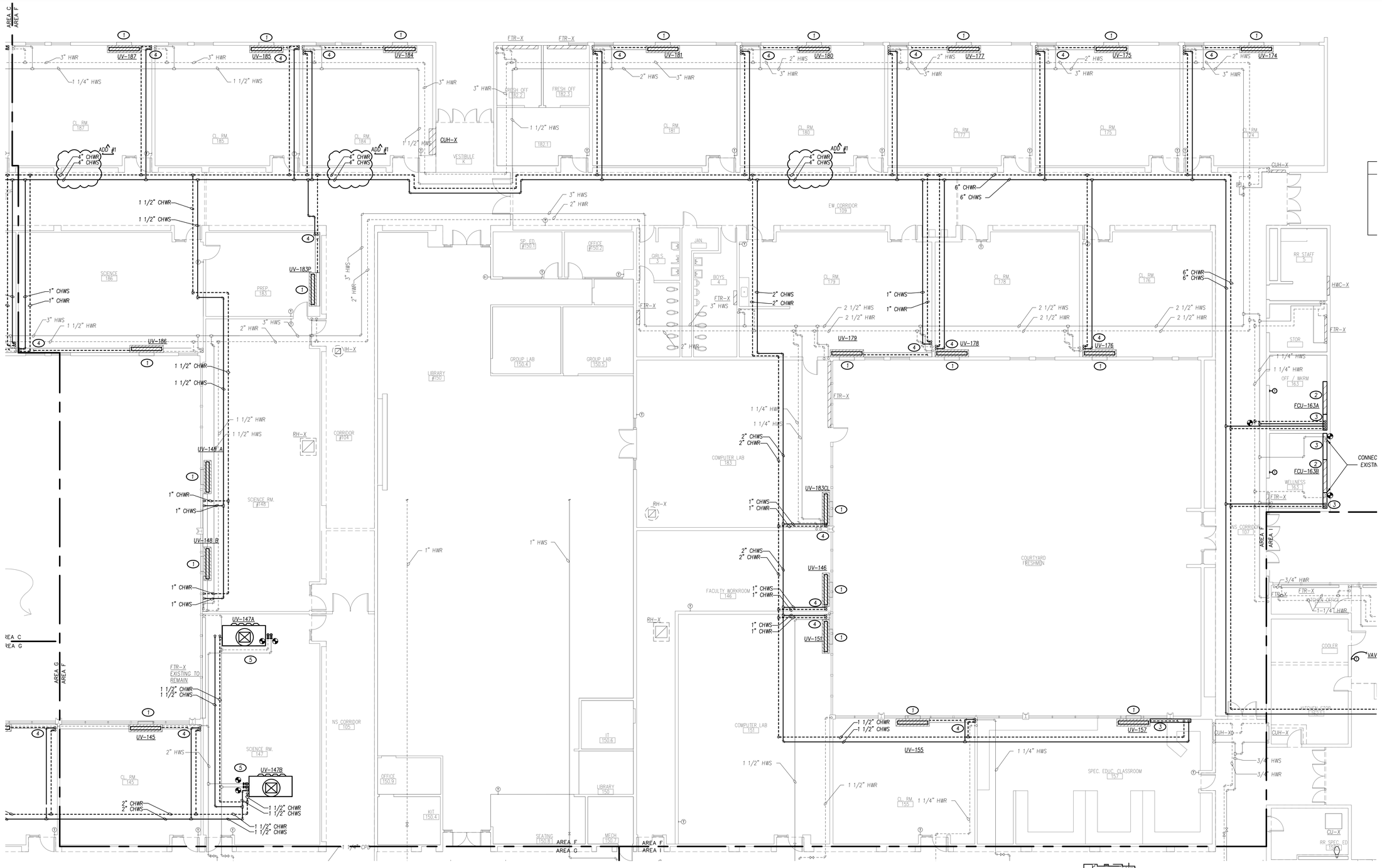

1 FIRST FLOOR PLAN - HEATING NEW WORK - AREA F

SCALE: 1/8" = 1'-0"

NORTH

PIPING NOTES

1. ALL HWS/R AND CHWS/R WITHOUT PIPE SIZES INDICATED ON PLANS SHALL BE 3/4".
2. IT SHALL BE THE CONTRACTORS RESPONSIBILITY TO REMOVE AND REINSTALL PORTIONS OF THE CEILING TILE AND GRID (WHICH IS NOT INDICATED ON THE ARCHITECTURAL DRAWINGS) AS REQUIRED TO PERFORM WORK OF THIS TRADE.

HEATING KEYED NOTES:

1. INSTALL NEW OWNER-FURNISHED CHILLED WATER COIL INTO EXISTING UNIT VENTILATOR. PROVIDE ALL MATERIAL AND LABOR TO INSTALL NEW COIL IN ACCORDANCE WITH MANUFACTURERS INSTALLATION INSTRUCTIONS. SEE DETAIL 1/H403 AND 4/H403
2. FURNISH AND INSTALL NEW VERTICAL FAN COIL UNIT, AND ASSOCIATED CHWS/R AND HWS/R PIPING AS INDICATED ON DRAWINGS, SEE DETAIL 1/H403.
3. FURNISH AND INSTALL PRE-MANUFACTURED PIPING ENCLOSURE (VULCAN MODEL LVH-T20 WO/LOUVERS OR APPROVED EQUALS) AS REQUIRED TO CONCEAL NEW PIPING. PROVIDE NEW HANGERS, CLIPS, END CAPS, ETC. SUBMIT PRE-FINISHED PIPE ENCLOSURE COLOR SAMPLES TO BE APPROVED BY ARCHITECT.
4. PROVIDE ALL MATERIAL AND LABOR TO REMOVE AND RE-INSTALL PIPING ENCLOSURE TO EXISTING UNIT VENTILATORS AND CUT AN OPENING IN EXISTING ENCLOSURE TO ALLOW FOR THE INSTALLATION OF NEW CHILLED WATER PIPING INTO EXISTING PIPING ENCLOSURE.
5. FURNISH AND INSTALL NEW HORIZONTAL UNIT VENTILATOR AS A DIRECT REPLACEMENT FOR EXISTING UNIT. PROVIDE NEW HWS/R AND CHWS/R PIPING CONNECTIONS SEE DETAIL 1/H403.

GENERAL NOTES

BASE BID

1. REMOVE DX COILS FROM EXISTING UNIT VENTILATORS AND INSTALL OWNER FURNISHED CHW COIL CONVERSION KIT IN EACH UNIT VENTILATOR.
2. FURNISH AND INSTALL NEW CHILLED WATER SYSTEM AS INDICATED ON PLANS.
3. WHERE EXISTING OCCUPIED SPACES LACK VENTILATION AND/OR AIR-CONDITIONING THE HEATING SYSTEM MAY BE REVISED TO PROVIDE FOR VENTILATION AND AIR-CONDITIONING. REFER TO KEYED NOTES ON PLANS.

ALTERNATE BID #1

1. ALL EXISTING HEATING HOT WATER SUPPLY/RETURN PIPING AND HEATING EQUIPMENT TO BE REMOVED AND REPLACED AS INDICATED ON DRAWINGS.
2. REFER TO DRAWING H11F.A FOR NEW HEATING WORK UNDER ALTERNATE BID #1.

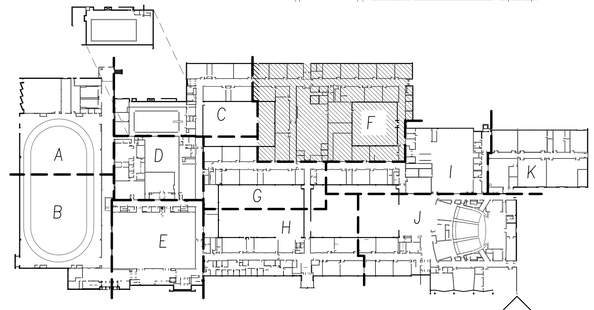

KEY PLAN

SCALE: NOT TO SCALE

NORTH

DATE: 2/21/2022

KEITH Engineering Design
www.keithmep.com
330 E. Jefferson Ave. Naperville, IL 60540
309.808.4000 - office
309.714.4063 - fax

ROCKFORD PUBLIC SCHOOLS

FEHR GRAHAM ENGINEERING & ENVIRONMENTAL
230 WOODLAWN AVENUE
AURORA, ILLINOIS 60506

Saavedra Group Architects
504 N. CHURCH STREET
ROCKFORD, ILLINOIS 61103

No.	Date	Revisions
1	3/17/2022	ADDENDUM 1

GUILFORD HIGH SCHOOL HVAC UPGRADE

ROCKFORD, ILLINOIS

Sheet Title: FIRST FLOOR PLAN - HEATING NEW WORK - AREA F

Proj. No.: 2251
Date: 02/21/2022
Drawn: GBW
Approved: RCR
Sheet No.: H11F

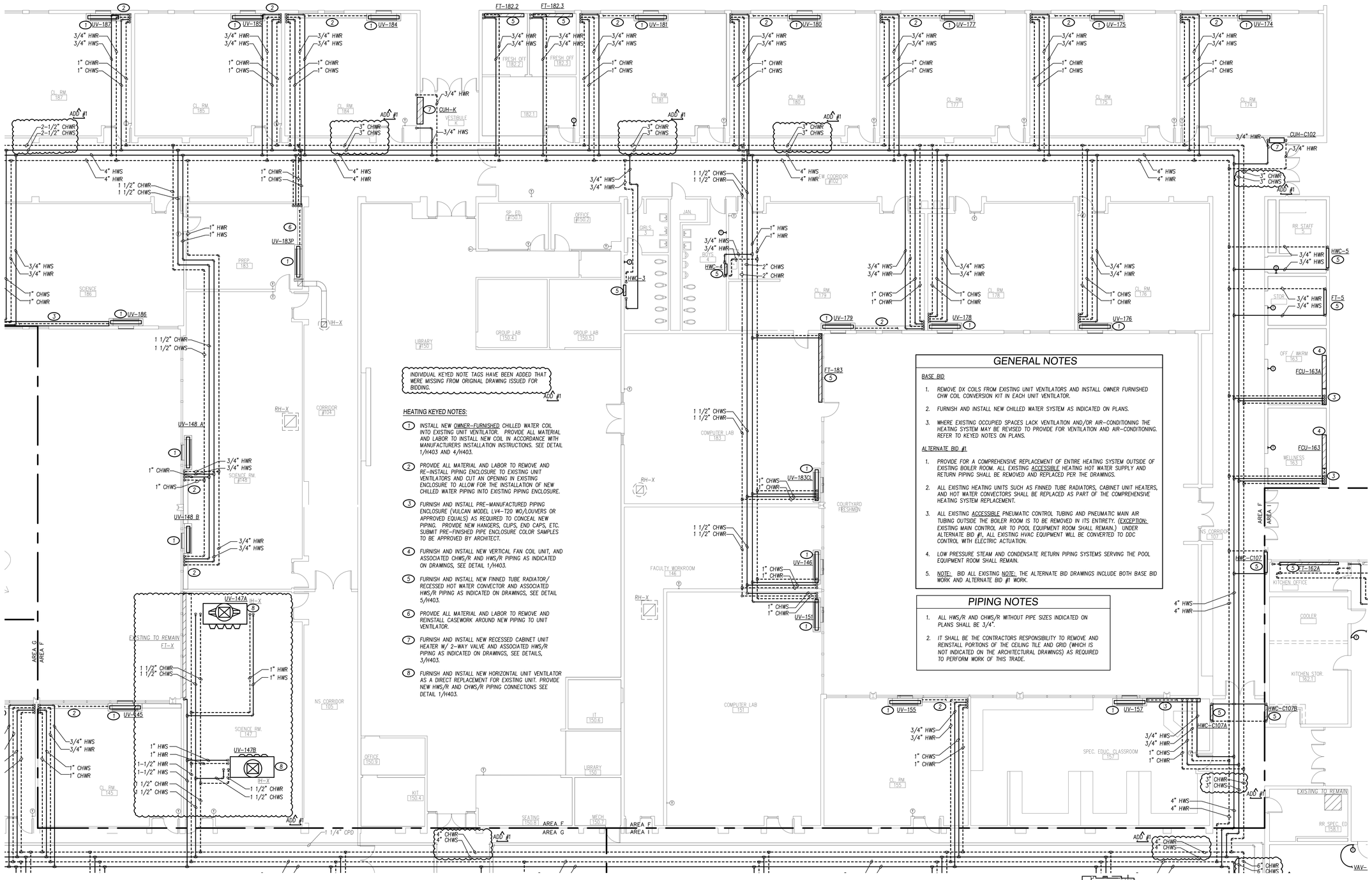

DATE: 2/21/2022

KEITH Engineering Design
www.keithmep.com
707 SE Jefferson Ave, Peoria, IL 61603
309.1830.4000 - office
309.214.4063 - fax

ROCKFORD PUBLIC SCHOOLS
FEHR GRAHAM ENGINEERING & ENVIRONMENTAL
230 WOODLAWN AVENUE AURORA, ILLINOIS 60506
Saavedra Group Architects
504 N. CHURCH STREET ROCKFORD, ILLINOIS 61103

No.	Date	Revisions
1	3/17/2022	ADDENDUM 1

GUILFORD HIGH SCHOOL
HVAC UPGRADE
ROCKFORD, ILLINOIS

Sheet Title:
FIRST FLOOR PLAN - HEATING
NEW WORK - AREA F
ALTERNATE BID # 1

Proj. No.:	2251
Date:	02/21/2022
Drawn:	GBW
Approved:	RCR
Sheet No.:	H111F.A

INDIVIDUAL KEYED NOTE TAGS HAVE BEEN ADDED THAT WERE MISSING FROM ORIGINAL DRAWING ISSUED FOR BIDDING.

ADD #1

HEATING KEYED NOTES:

1. INSTALL NEW OWNER-FURNISHED CHILLED WATER COIL INTO EXISTING UNIT VENTILATOR. PROVIDE ALL MATERIAL AND LABOR TO INSTALL NEW COIL IN ACCORDANCE WITH MANUFACTURERS INSTALLATION INSTRUCTIONS. SEE DETAIL 1/H403 AND 4/H403.
2. PROVIDE ALL MATERIAL AND LABOR TO REMOVE AND RE-INSTALL PIPING ENCLOSURE TO EXISTING UNIT VENTILATORS AND CUT AN OPENING IN EXISTING ENCLOSURE TO ALLOW FOR THE INSTALLATION OF NEW CHILLED WATER PIPING INTO EXISTING PIPING ENCLOSURE.
3. FURNISH AND INSTALL PRE-MANUFACTURED PIPING ENCLOSURE (VULCAN MODEL LV4-T20 WO/LOUVERS OR APPROVED EQUALS) AS REQUIRED TO CONCEAL NEW PIPING. PROVIDE NEW HANGERS, CLIPS, END CAPS, ETC. SUBMIT PRE-FINISHED PIPE ENCLOSURE COLOR SAMPLES TO BE APPROVED BY ARCHITECT.
4. FURNISH AND INSTALL NEW VERTICAL FAN COIL UNIT, AND ASSOCIATED CHWS/R AND HWS/R PIPING AS INDICATED ON DRAWINGS, SEE DETAIL 1/H403.
5. FURNISH AND INSTALL NEW FINNED TUBE RADIATOR/ RECESSED HOT WATER CONVECTOR AND ASSOCIATED HWS/R PIPING AS INDICATED ON DRAWINGS, SEE DETAIL 5/H403.

GENERAL NOTES

BASE BID

1. REMOVE DX COILS FROM EXISTING UNIT VENTILATORS AND INSTALL OWNER FURNISHED CHW COIL CONVERSION KIT IN EACH UNIT VENTILATOR.
2. FURNISH AND INSTALL NEW CHILLED WATER SYSTEM AS INDICATED ON PLANS.
3. WHERE EXISTING OCCUPIED SPACES LACK VENTILATION AND/OR AIR-CONDITIONING THE HEATING SYSTEM MAY BE REVISED TO PROVIDE FOR VENTILATION AND AIR-CONDITIONING. REFER TO KEYED NOTES ON PLANS.

ALTERNATE BID #1

1. PROVIDE FOR A COMPREHENSIVE REPLACEMENT OF ENTIRE HEATING SYSTEM OUTSIDE OF EXISTING BOILER ROOM. ALL EXISTING ACCESSIBLE HEATING HOT WATER SUPPLY AND RETURN PIPING SHALL BE REMOVED AND REPLACED PER THE DRAWINGS.
2. ALL EXISTING HEATING UNITS SUCH AS FINNED TUBE RADIATORS, CABINET UNIT HEATERS, AND HOT WATER CONVECTORS SHALL BE REPLACED AS PART OF THE COMPREHENSIVE HEATING SYSTEM REPLACEMENT.
3. ALL EXISTING ACCESSIBLE PNEUMATIC CONTROL TUBING AND PNEUMATIC MAIN AIR TUBING OUTSIDE THE BOILER ROOM IS TO BE REMOVED IN ITS ENTIRETY. (EXCEPTION: EXISTING MAIN CONTROL AIR TO POOL EQUIPMENT ROOM SHALL REMAIN.) UNDER ALTERNATE BID #1, ALL EXISTING HVAC EQUIPMENT WILL BE CONVERTED TO DDC CONTROL WITH ELECTRIC ACTUATION.
4. LOW PRESSURE STEAM AND CONDENSATE RETURN PIPING SYSTEMS SERVING THE POOL EQUIPMENT ROOM SHALL REMAIN.
5. NOTE: BID ALL EXISTING NOTE: THE ALTERNATE BID DRAWINGS INCLUDE BOTH BASE BID WORK AND ALTERNATE BID #1 WORK.

PIPING NOTES

1. ALL HWS/R AND CHWS/R WITHOUT PIPE SIZES INDICATED ON PLANS SHALL BE 3/4".
2. IT SHALL BE THE CONTRACTORS RESPONSIBILITY TO REMOVE AND REINSTALL PORTIONS OF THE CEILING TILE AND GRID (WHICH IS NOT INDICATED ON THE ARCHITECTURAL DRAWINGS) AS REQUIRED TO PERFORM WORK OF THIS TRADE.

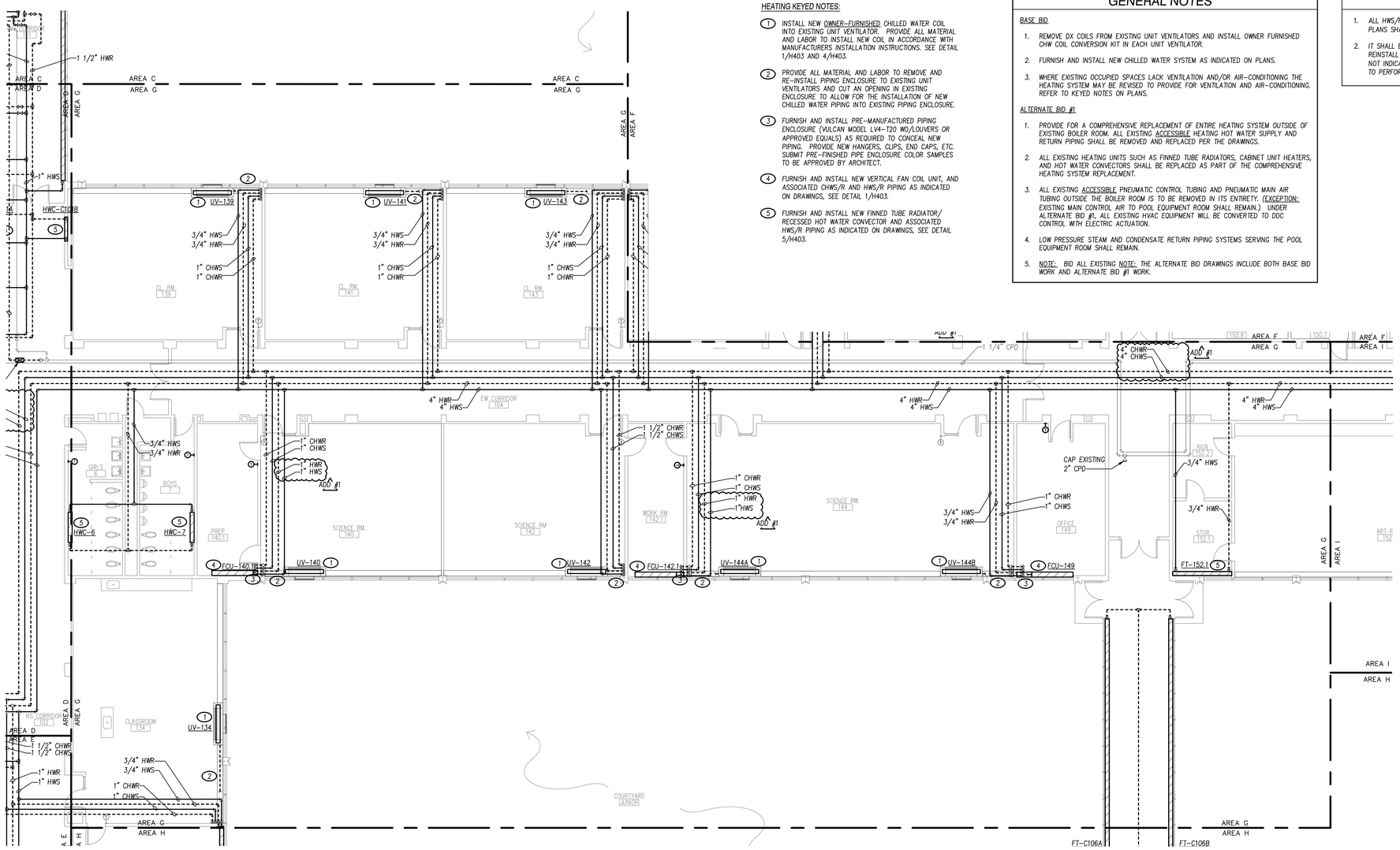

1 ALTERNATE BID # 1
FIRST FLOOR PLAN - HEATING NEW WORK - AREA G
SCALE: 1/8" = 1'-0"

NORTH

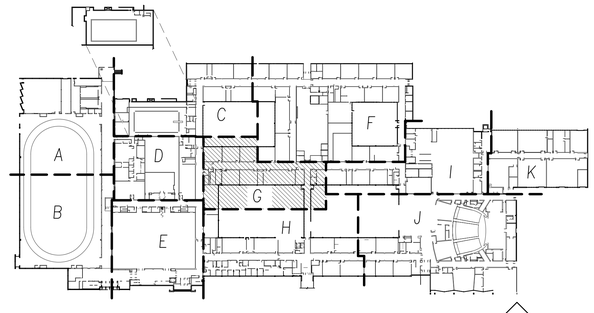

KEY PLAN
SCALE: NOT TO SCALE

NORTH

REG. PROFESSIONAL ENGINEER
STATE OF ILLINOIS
EXPIRES: 11/30/2022
DATE: 2/21/2022

KEITH Engineering Design
www.keithmep.com
707 SE Jefferson Ave. Peoria, IL 61603
309.1656.4000 - office
309.714.4063 - fax

ROCKFORD PUBLIC SCHOOLS
FEHR GRAHAM
ENGINEERING & ENVIRONMENTAL
120 WOODLAWN AVENUE
AURORA, ILLINOIS 60506
Saavedra Group Architects
504 N. CHURCH STREET
ROCKFORD, ILLINOIS 61103

No.	Date	Revisions
1	3/17/2022	ADDENDUM 1

GUILFORD HIGH SCHOOL
HVAC UPGRADE
ROCKFORD, ILLINOIS

Sheet Title:
FIRST FLOOR PLAN - HEATING
NEW WORK - AREA G
ALTERNATE BID # 1

Proj. No.:	2251
Date:	02/21/2022
Drawn:	GBW
Approved:	RCR
Sheet No.:	H111G.A

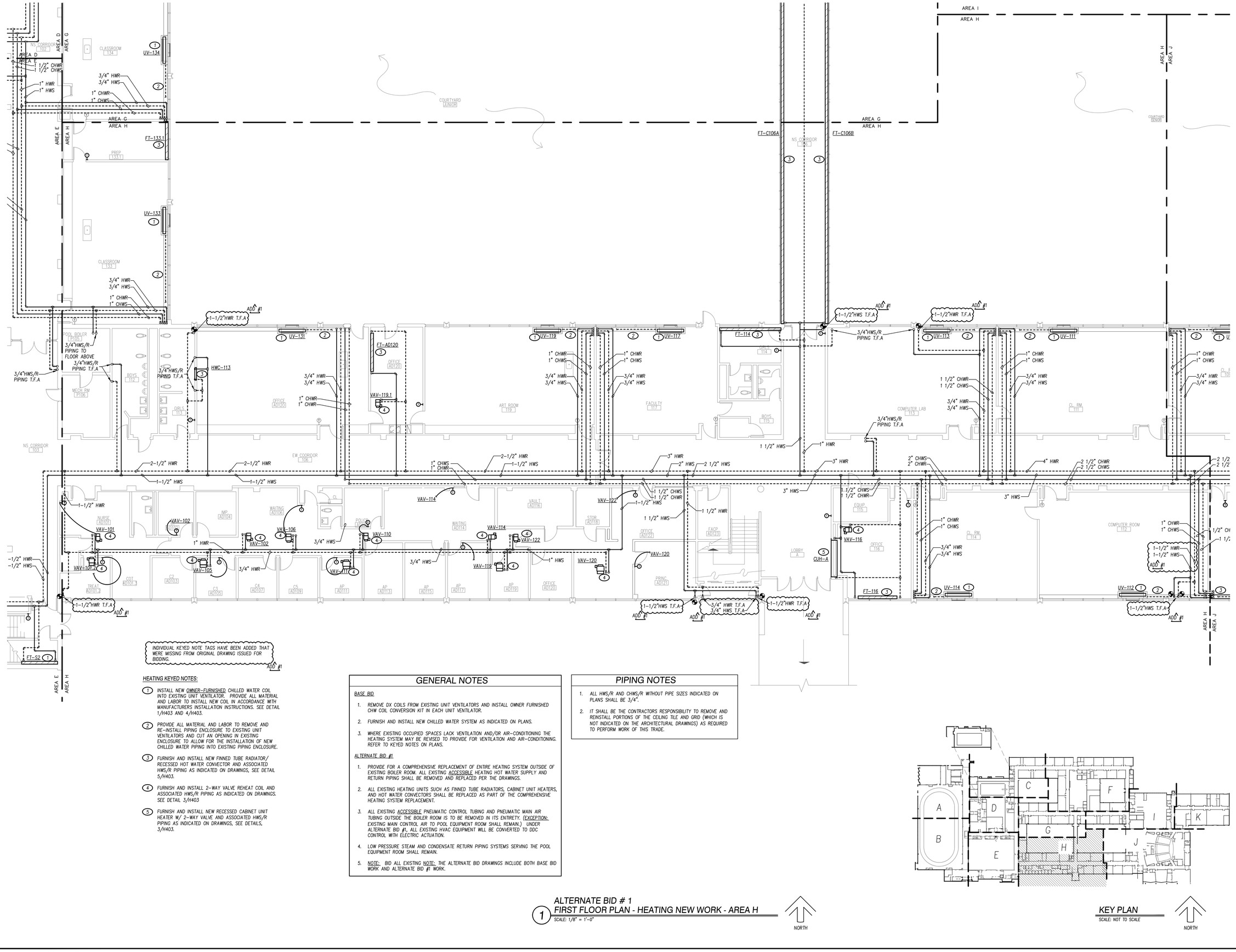

INDIVIDUAL KEYED NOTE TAGS HAVE BEEN ADDED THAT WERE MISSING FROM ORIGINAL DRAWING ISSUED FOR BIDDING.

ADD #1

HEATING KEYED NOTES:

1. INSTALL NEW OWNER-FURNISHED CHILLED WATER COIL INTO EXISTING UNIT VENTILATOR. PROVIDE ALL MATERIAL AND LABOR TO INSTALL NEW COIL IN ACCORDANCE WITH MANUFACTURERS INSTALLATION INSTRUCTIONS. SEE DETAIL 1/H403 AND 4/H403.
2. PROVIDE ALL MATERIAL AND LABOR TO REMOVE AND RE-INSTALL PIPING ENCLOSURE TO EXISTING UNIT VENTILATORS AND CUT AN OPENING IN EXISTING ENCLOSURE TO ALLOW FOR THE INSTALLATION OF NEW CHILLED WATER PIPING INTO EXISTING PIPING ENCLOSURE.
3. FURNISH AND INSTALL NEW FINNED TUBE RADIATOR/ RECESSED HOT WATER CONVECTOR AND ASSOCIATED HWS/R PIPING AS INDICATED ON DRAWINGS, SEE DETAIL 5/H403.
4. FURNISH AND INSTALL 2-WAY VALVE REHEAT COIL AND ASSOCIATED HWS/R PIPING AS INDICATED ON DRAWINGS. SEE DETAIL 3/H403
5. FURNISH AND INSTALL NEW RECESSED CABINET UNIT HEATER W/ 2-WAY VALVE AND ASSOCIATED HWS/R PIPING AS INDICATED ON DRAWINGS, SEE DETAILS, 3/H403.

GENERAL NOTES

BASE BID

1. REMOVE DX COILS FROM EXISTING UNIT VENTILATORS AND INSTALL OWNER FURNISHED CHW COIL CONVERSION KIT IN EACH UNIT VENTILATOR.
2. FURNISH AND INSTALL NEW CHILLED WATER SYSTEM AS INDICATED ON PLANS.
3. WHERE EXISTING OCCUPIED SPACES LACK VENTILATION AND/OR AIR-CONDITIONING THE HEATING SYSTEM MAY BE REVISED TO PROVIDE FOR VENTILATION AND AIR-CONDITIONING. REFER TO KEYED NOTES ON PLANS.

ALTERNATE BID #1

1. PROVIDE FOR A COMPREHENSIVE REPLACEMENT OF ENTIRE HEATING SYSTEM OUTSIDE OF EXISTING BOILER ROOM. ALL EXISTING ACCESSIBLE HEATING HOT WATER SUPPLY AND RETURN PIPING SHALL BE REMOVED AND REPLACED PER THE DRAWINGS.
2. ALL EXISTING HEATING UNITS SUCH AS FINNED TUBE RADIATORS, CABINET UNIT HEATERS, AND HOT WATER CONVECTORS SHALL BE REPLACED AS PART OF THE COMPREHENSIVE HEATING SYSTEM REPLACEMENT.
3. ALL EXISTING ACCESSIBLE PNEUMATIC CONTROL TUBING AND PNEUMATIC MAIN AIR TUBING OUTSIDE THE BOILER ROOM IS TO BE REMOVED IN ITS ENTIRETY. (EXCEPTION: EXISTING MAIN CONTROL AIR TO POOL EQUIPMENT ROOM SHALL REMAIN.) UNDER ALTERNATE BID #1, ALL EXISTING HVAC EQUIPMENT WILL BE CONVERTED TO DDC CONTROL WITH ELECTRIC ACTUATION.
4. LOW PRESSURE STEAM AND CONDENSATE RETURN PIPING SYSTEMS SERVING THE POOL EQUIPMENT ROOM SHALL REMAIN.
5. NOTE: BID ALL EXISTING NOTE: THE ALTERNATE BID DRAWINGS INCLUDE BOTH BASE BID WORK AND ALTERNATE BID #1 WORK.

PIPING NOTES

1. ALL HWS/R AND CHWS/R WITHOUT PIPE SIZES INDICATED ON PLANS SHALL BE 3/4".
2. IT SHALL BE THE CONTRACTORS RESPONSIBILITY TO REMOVE AND REINSTALL PORTIONS OF THE CEILING TILE AND GRID (WHICH IS NOT INDICATED ON THE ARCHITECTURAL DRAWINGS) AS REQUIRED TO PERFORM WORK OF THIS TRADE.

1 ALTERNATE BID # 1
FIRST FLOOR PLAN - HEATING NEW WORK - AREA H
SCALE: 1/8" = 1'-0"

NORTH

KEY PLAN
SCALE: NOT TO SCALE

NORTH

RCR
REF
052-056761
STATE OF ILLINOIS
DATE: 2/21/2022

KEITH Engineering Design
www.keithmep.com
707 SE Jefferson Ave. Suite 100 Peoria, IL 61603
309.808.4000 office
309.714.4060 fax

ROCKFORD PUBLIC SCHOOLS
FEHR GRAHAM ENGINEERING & ENVIRONMENTAL
230 WOODLAWN AVENUE AURORA, ILLINOIS 60506
Saavedra Group Architects
504 N. CHURCH STREET ROCKFORD, ILLINOIS 61103

No.	Date	Revisions
1	3/17/2022	ADDENDUM 1

GUILFORD HIGH SCHOOL
HVAC UPGRADE
ROCKFORD, ILLINOIS

Sheet Title:
FIRST FLOOR PLAN - HEATING
NEW WORK - AREA H
ALTERNATE BID # 1

Proj. No.:	2251
Date:	02/21/2022
Drawn:	GBW
Approved:	RCR
Sheet No.:	H111H.A

PIPING NOTES

1. ALL HWS/R AND CHWS/R WITHOUT PIPE SIZES INDICATED ON PLANS SHALL BE 3/4".
2. IT SHALL BE THE CONTRACTORS RESPONSIBILITY TO REMOVE AND REINSTALL PORTIONS OF THE CEILING TILE AND GRID (WHICH IS NOT INDICATED ON THE ARCHITECTURAL DRAWINGS) AS REQUIRED TO PERFORM WORK OF THIS TRADE.

HEATING KEYED NOTES:

1. INSTALL NEW OWNER-FURNISHED CHILLED WATER COIL INTO EXISTING UNIT VENTILATOR. PROVIDE ALL MATERIAL AND LABOR TO INSTALL NEW COIL IN ACCORDANCE WITH MANUFACTURERS INSTALLATION INSTRUCTIONS. SEE DETAIL 1/H403 AND 4/H403
2. FURNISH AND INSTALL NEW VERTICAL FAN COIL UNIT, AND ASSOCIATED CHWS/R AND HWS/R PIPING AS INDICATED ON DRAWINGS, SEE DETAIL 1/H403.
3. FURNISH AND INSTALL PRE-MANUFACTURED PIPING ENCLOSURE (VULCAN MODEL LV4-T20 WO/LOUVERS OR APPROVED EQUALS) AS REQUIRED TO CONCEAL NEW PIPING. PROVIDE NEW HANGERS, CLIPS, END CAPS, ETC. SUBMIT PRE-FINISHED PIPE ENCLOSURE COLOR SAMPLES TO BE APPROVED BY ARCHITECT.
4. PROVIDE ALL MATERIAL AND LABOR TO REMOVE AND RE-INSTALL PIPING ENCLOSURE TO EXISTING UNIT VENTILATORS AND CUT AN OPENING IN EXISTING ENCLOSURE TO ALLOW FOR THE INSTALLATION OF NEW CHILLED WATER PIPING INTO EXISTING PIPING ENCLOSURE.
5. FURNISH AND INSTALL NEW UNIT HEATER W/ 2-WAY VALVE AND ASSOCIATED HWS/R PIPING AS INDICATED ON DRAWINGS, SEE DETAILS, 3/H403.
6. FURNISH AND INSTALL NEW HOT WATER REHEAT VARIABLE AIR VOLUME BOX W/ 3-WAY VALVE AND ASSOCIATED HWS/R PIPING AS INDICATED ON DRAWINGS. SEE DETAIL 2/H403

ADD #1

GENERAL NOTES

BASE BID

1. REMOVE DX COILS FROM EXISTING UNIT VENTILATORS AND INSTALL OWNER FURNISHED CHW COIL CONVERSION KIT IN EACH UNIT VENTILATOR.
2. FURNISH AND INSTALL NEW CHILLED WATER SYSTEM AS INDICATED ON PLANS.
3. WHERE EXISTING OCCUPIED SPACES LACK VENTILATION AND/OR AIR-CONDITIONING THE HEATING SYSTEM MAY BE REVISED TO PROVIDE FOR VENTILATION AND AIR-CONDITIONING. REFER TO KEYED NOTES ON PLANS.

ALTERNATE BID #1

1. ALL EXISTING HEATING HOT WATER SUPPLY/RETURN PIPING AND HEATING EQUIPMENT TO BE REMOVED AND REPLACED AS INDICATED ON DRAWINGS.
2. REFER TO DRAWING H111.A FOR NEW HEATING WORK UNDER ALTERNATE BID #1.

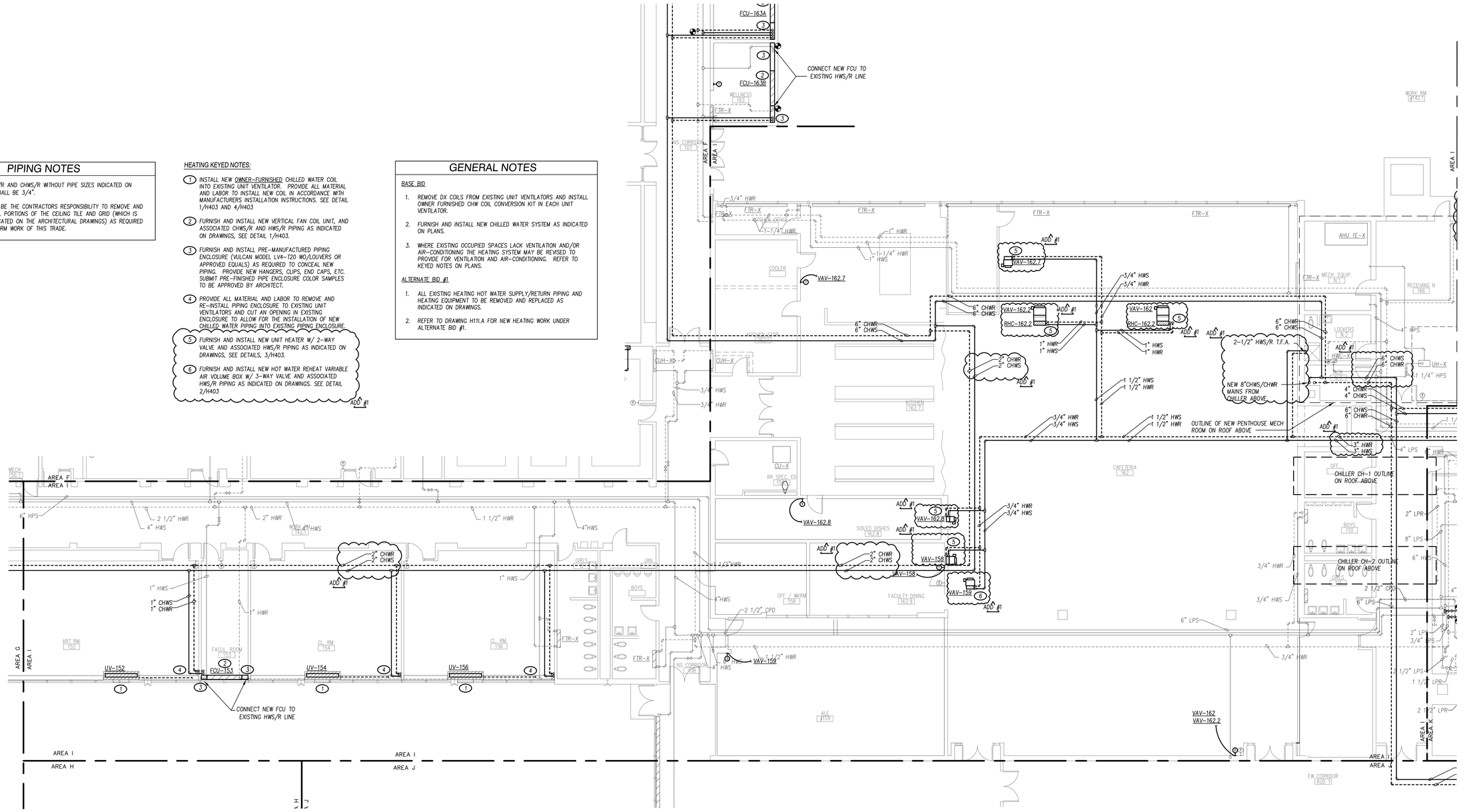

1 FIRST FLOOR PLAN - HEATING NEW WORK - AREA I
SCALE: 1/8" = 1'-0"

NORTH

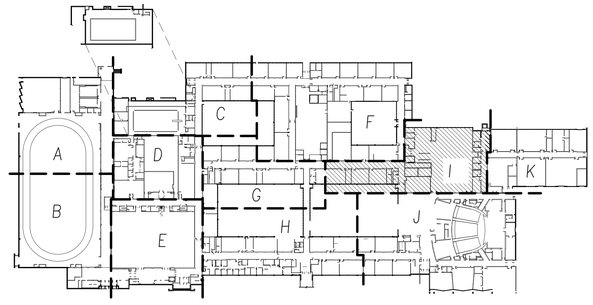

KEY PLAN
SCALE: NOT TO SCALE

NORTH

DATE: 2/21/2022

KEITH Engineering Design
www.keithmep.com
707 SE Jefferson Ave, Peoria, IL 61603
309 / 676-4000 - office
309 / 214-0063 - fax

ROCKFORD PUBLIC SCHOOLS

FEHR GRAHAM ENGINEERING & ENVIRONMENTAL
230 WOODLAWN AVENUE
AURORA, ILLINOIS 60506

Saavedra Group Architects
504 N. CHURCH STREET
ROCKFORD, ILLINOIS 61103

No.	Date	Revisions
1	3/17/2022	ADDENDUM 1

GUILFORD HIGH SCHOOL
HVAC UPGRADE
ROCKFORD, ILLINOIS

Sheet Title:
FIRST FLOOR PLAN - HEATING
NEW WORK - AREA I

Proj. No.: 2251
Date: 02/21/2022
Drawn: GBW
Approved: RCR
Sheet No.: H111

INDIVIDUAL KEYED NOTE TAGS HAVE BEEN ADDED THAT WERE MISSING FROM ORIGINAL DRAWING ISSUED FOR BIDDING.

ADD #1

HEATING KEYED NOTES:

1. INSTALL NEW OWNER-FURNISHED CHILLED WATER COIL INTO EXISTING UNIT VENTILATOR. PROVIDE ALL MATERIAL AND LABOR TO INSTALL NEW COIL IN ACCORDANCE WITH MANUFACTURERS INSTALLATION INSTRUCTIONS. SEE DETAIL 1/H403 AND 4/H403.
2. PROVIDE ALL MATERIAL AND LABOR TO REMOVE AND RE-INSTALL PIPING ENCLOSURE TO EXISTING UNIT VENTILATORS AND CUT AN OPENING IN EXISTING ENCLOSURE TO ALLOW FOR THE INSTALLATION OF NEW CHILLED WATER PIPING INTO EXISTING PIPING ENCLOSURE.
3. FURNISH AND INSTALL PRE-MANUFACTURED PIPING ENCLOSURE (VULCAN MODEL LV4-T20 WO/LOUVERS OR APPROVED EQUALS) AS REQUIRED TO CONCEAL NEW PIPING. PROVIDE NEW HANGERS, CLIPS, END CAPS, ETC. SUBMIT PRE-FINISHED PIPE ENCLOSURE COLOR SAMPLES TO BE APPROVED BY ARCHITECT.
4. FURNISH AND INSTALL NEW VERTICAL FAN COIL UNIT, AND ASSOCIATED CHWS/R AND HWS/R PIPING AS INDICATED ON DRAWINGS, SEE DETAIL 1/H403.
5. FURNISH AND INSTALL NEW FINNED TUBE RADIATOR/ RECESSED HOT WATER CONVECTOR AND ASSOCIATED HWS/R PIPING AS INDICATED ON DRAWINGS, SEE DETAIL 5/H403.
6. FURNISH AND INSTALL NEW HOT WATER REHEAT VARIABLE AIR VOLUME BOX W/ 2-WAY VALVE AND ASSOCIATED HWS/R PIPING AS INDICATED ON DRAWINGS. SEE DETAIL 3/H403
7. FURNISH AND INSTALL NEW HOT WATER REHEAT VARIABLE AIR VOLUME BOX W/ 3-WAY VALVE AND ASSOCIATED HWS/R PIPING AS INDICATED ON DRAWINGS. SEE DETAIL 2/H403
8. FURNISH AND INSTALL NEW UNIT HEATER W/ 2-WAY VALVE AND ASSOCIATED HWS/R PIPING AS INDICATED ON DRAWINGS, SEE DETAILS, 3/H403.

GENERAL NOTES

BASE BID

1. REMOVE DX COILS FROM EXISTING UNIT VENTILATORS AND INSTALL OWNER FURNISHED CHW COIL CONVERSION KIT IN EACH UNIT VENTILATOR.
2. FURNISH AND INSTALL NEW CHILLED WATER SYSTEM AS INDICATED ON PLANS.
3. WHERE EXISTING OCCUPIED SPACES LACK VENTILATION AND/OR AIR-CONDITIONING THE HEATING SYSTEM MAY BE REVISED TO PROVIDE FOR VENTILATION AND AIR-CONDITIONING. REFER TO KEYED NOTES ON PLANS.

ALTERNATE BID #1

1. PROVIDE FOR A COMPREHENSIVE REPLACEMENT OF ENTIRE HEATING SYSTEM OUTSIDE OF EXISTING BOILER ROOM. ALL EXISTING ACCESSIBLE HEATING HOT WATER SUPPLY AND RETURN PIPING SHALL BE REMOVED AND REPLACED PER THE DRAWINGS.
2. ALL EXISTING HEATING UNITS SUCH AS FINNED TUBE RADIATORS, CABINET UNIT HEATERS, AND HOT WATER CONVECTORS SHALL BE REPLACED AS PART OF THE COMPREHENSIVE HEATING SYSTEM REPLACEMENT.
3. ALL EXISTING ACCESSIBLE PNEUMATIC CONTROL TUBING AND PNEUMATIC MAIN AIR TUBING OUTSIDE THE BOILER ROOM IS TO BE REMOVED IN ITS ENTIRETY. (EXCEPTION: EXISTING MAIN CONTROL AIR TO POOL EQUIPMENT ROOM SHALL REMAIN.) UNDER ALTERNATE BID #1, ALL EXISTING HVAC EQUIPMENT WILL BE CONVERTED TO DDC CONTROL WITH ELECTRIC ACTUATION.
4. LOW PRESSURE STEAM AND CONDENSATE RETURN PIPING SYSTEMS SERVING THE POOL EQUIPMENT ROOM SHALL REMAIN.
5. NOTE: BID ALL EXISTING NOTE: THE ALTERNATE BID DRAWINGS INCLUDE BOTH BASE BID WORK AND ALTERNATE BID #1 WORK.

PIPING NOTES

1. ALL HWS/R AND CHWS/R WITHOUT PIPE SIZES INDICATED ON PLANS SHALL BE 3/4".
2. IT SHALL BE THE CONTRACTORS RESPONSIBILITY TO REMOVE AND REINSTALL PORTIONS OF THE CEILING TILE AND GRID (WHICH IS NOT INDICATED ON THE ARCHITECTURAL DRAWINGS) AS REQUIRED TO PERFORM WORK OF THIS TRADE.

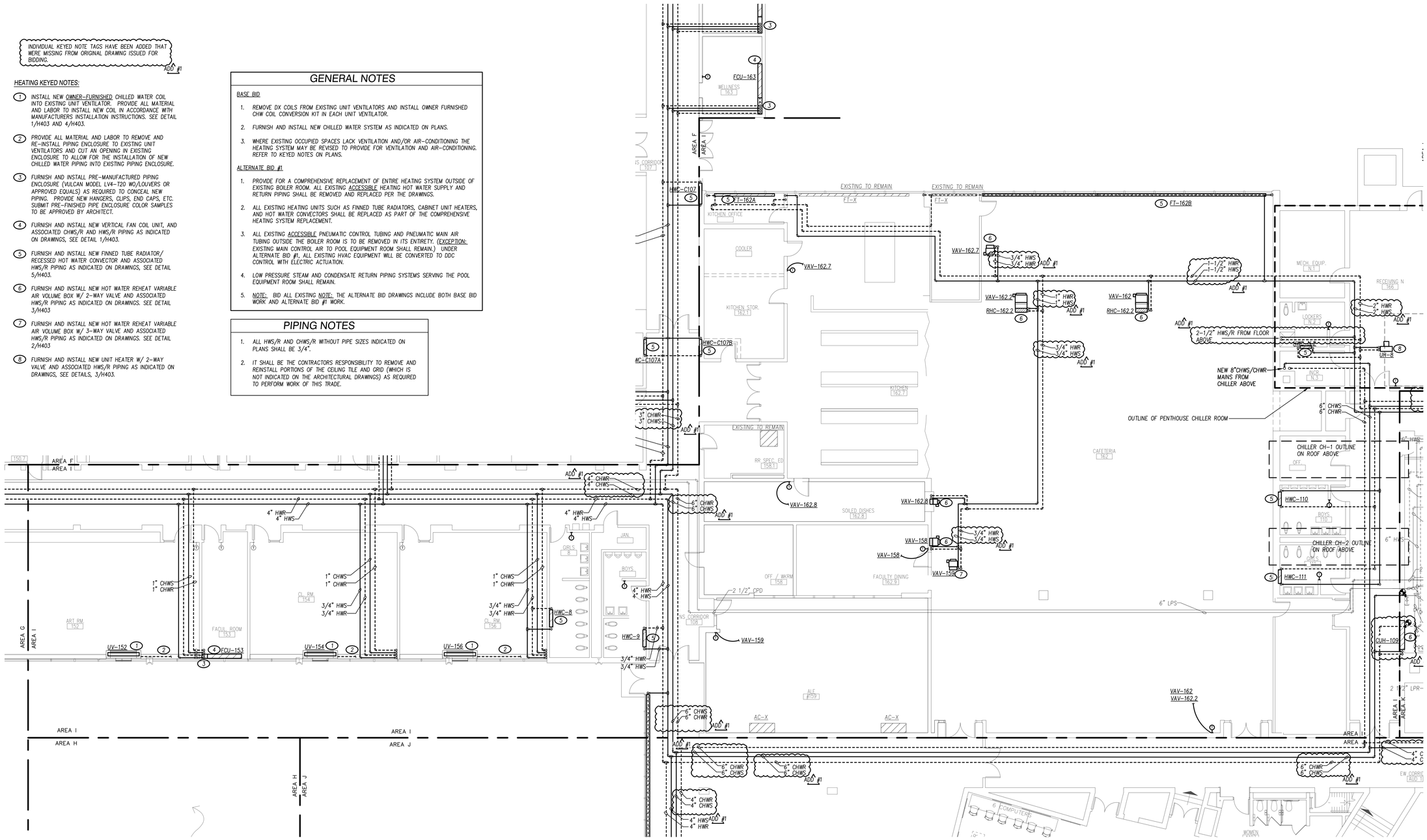

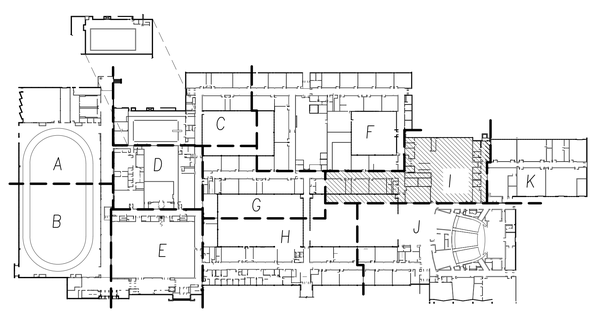

1 ALTERNATE BID # 1
FIRST FLOOR PLAN - HEATING NEW WORK - AREA I
SCALE: 1/8" = 1'-0"

NORTH

KEY PLAN
SCALE: NOT TO SCALE

NORTH

DATE: 2/21/2022

KEITH Engineering Design
www.keithmep.com
707 SE Jefferson Ave. Peoria, IL 61603
309.1656.4000 - office
309.214.4063 - fax

ROCKFORD PUBLIC SCHOOLS
FEHR GRAHAM ENGINEERING & ENVIRONMENTAL
230 WOODLAWN AVENUE AURORA, ILLINOIS 60506
Saavedra Group Architects
504 N. CHURCH STREET ROCKFORD, ILLINOIS 61103

Revisions

No.	Date	
1	3/17/2022	ADDENDUM 1

GUILFORD HIGH SCHOOL
HVAC UPGRADE
ROCKFORD, ILLINOIS

Sheet Title:
FIRST FLOOR PLAN - HEATING
NEW WORK - AREA I
ALTERNATE BID # 1

Proj. No.: 2251
Date: 02/21/2022
Drawn: GBW
Approved: RCR
Sheet No.: H111.A

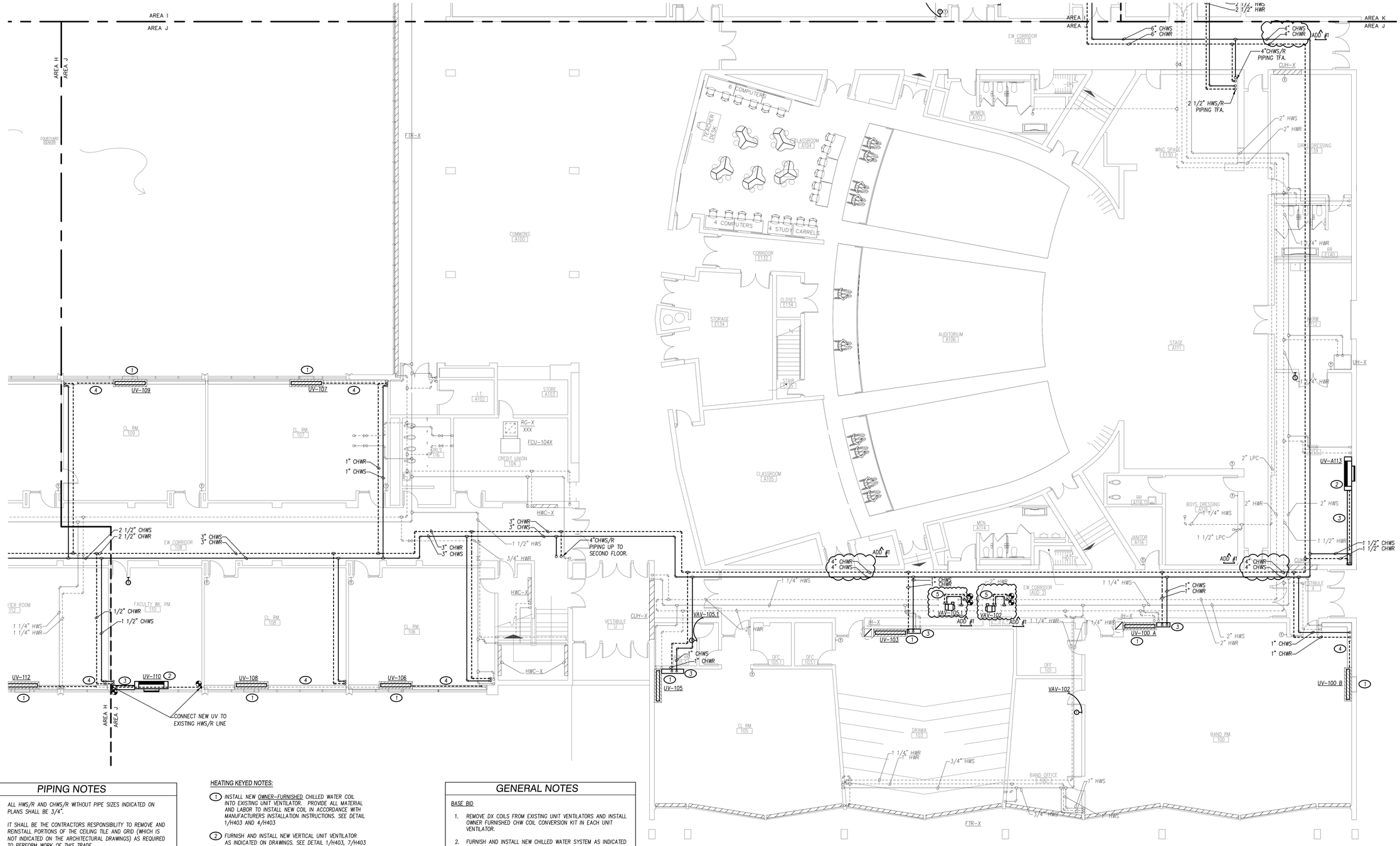

PIPING NOTES

1. ALL HWS/R AND CHWS/R WITHOUT PIPE SIZES INDICATED ON PLANS SHALL BE 3/4".
2. IT SHALL BE THE CONTRACTORS RESPONSIBILITY TO REMOVE AND REINSTALL PORTIONS OF THE CEILING TILE AND GRID (WHICH IS NOT INDICATED ON THE ARCHITECTURAL DRAWINGS) AS REQUIRED TO PERFORM WORK OF THIS TRADE.

HEATING KEYED NOTES:

1. INSTALL NEW OWNER-FURNISHED CHILLED WATER COIL INTO EXISTING UNIT VENTILATOR. PROVIDE ALL MATERIAL AND LABOR TO INSTALL NEW COIL IN ACCORDANCE WITH MANUFACTURERS INSTALLATION INSTRUCTIONS. SEE DETAIL 1/H403 AND 4/H403
2. FURNISH AND INSTALL NEW VERTICAL UNIT VENTILATOR AS INDICATED ON DRAWINGS. SEE DETAIL 1/H403, 7/H403 AND 8/H403.
3. FURNISH AND INSTALL PRE-MANUFACTURED PIPING ENCLOSURE (VULCAN MODEL LV4-T20 WO/LOUVERS OR APPROVED EQUALS) AS REQUIRED TO CONCEAL NEW PIPING. PROVIDE NEW HANGERS, CLIPS, END CAPS, ETC. SUBMIT PRE-FINISHED PIPE ENCLOSURE COLOR SAMPLES TO BE APPROVED BY ARCHITECT.
4. PROVIDE ALL MATERIAL AND LABOR TO REMOVE AND RE-INSTALL PIPING ENCLOSURE TO EXISTING UNIT VENTILATORS AND CUT AN OPENING IN EXISTING ENCLOSURE TO ALLOW FOR THE INSTALLATION OF NEW CHILLED WATER PIPING INTO EXISTING PIPING ENCLOSURE.
5. FURNISH AND INSTALL NEW UNIT HEATER W/ 2-WAY VALVE AND ASSOCIATED HWS/R PIPING AS INDICATED ON DRAWINGS, SEE DETAILS, 3/H403.

ADD #1

GENERAL NOTES

BASE BID

1. REMOVE DX COILS FROM EXISTING UNIT VENTILATORS AND INSTALL OWNER FURNISHED CHW COIL CONVERSION KIT IN EACH UNIT VENTILATOR.
2. FURNISH AND INSTALL NEW CHILLED WATER SYSTEM AS INDICATED ON PLANS.
3. WHERE EXISTING OCCUPIED SPACES LACK VENTILATION AND/OR AIR-CONDITIONING THE HEATING SYSTEM MAY BE REVISED TO PROVIDE FOR VENTILATION AND AIR-CONDITIONING. REFER TO KEYED NOTES ON PLANS.

ALTERNATE BID #1

1. ALL EXISTING HEATING HOT WATER SUPPLY/RETURN PIPING AND HEATING EQUIPMENT TO BE REMOVED AND REPLACED AS INDICATED ON DRAWINGS.
2. REFER TO DRAWING H11.1.A FOR NEW HEATING WORK UNDER ALTERNATE BID #1.

1 FIRST FLOOR PLAN - HEATING NEW WORK - AREA J
SCALE: 1/8" = 1'-0"

NORTH

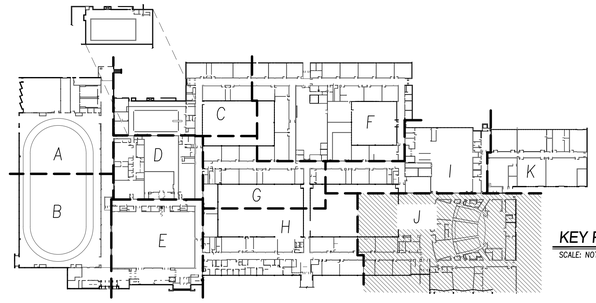

KEY PLAN
SCALE: NOT TO SCALE

NORTH

STATE OF ILLINOIS
REG. NO. 062-056761
RENEWAL
DATE: 2/21/2022

KEITH Engineering Design
www.keithmep.com
309.808.4000 office
309.714.0063 fax
707 SE Jefferson Ave
Peoria, IL 61603

ROCKFORD PUBLIC SCHOOLS
FEHR GRAHAM ENGINEERING & ENVIRONMENTAL
230 WOODLAWN AVENUE
AURORA, ILLINOIS 60506
Saavedra Group Architects
504 N. CHURCH STREET
ROCKFORD, ILLINOIS 61103

Revisions

No.	Date	
1	3/17/2022	ADDENDUM 1

GUILFORD HIGH SCHOOL HVAC UPGRADE

ROCKFORD, ILLINOIS

Sheet Title:
FIRST FLOOR PLAN - HEATING
NEW WORK - AREA J

Proj. No.:	2251
Date:	02/21/2022
Drawn:	GBW
Approved:	RCR
Sheet No.:	H11J

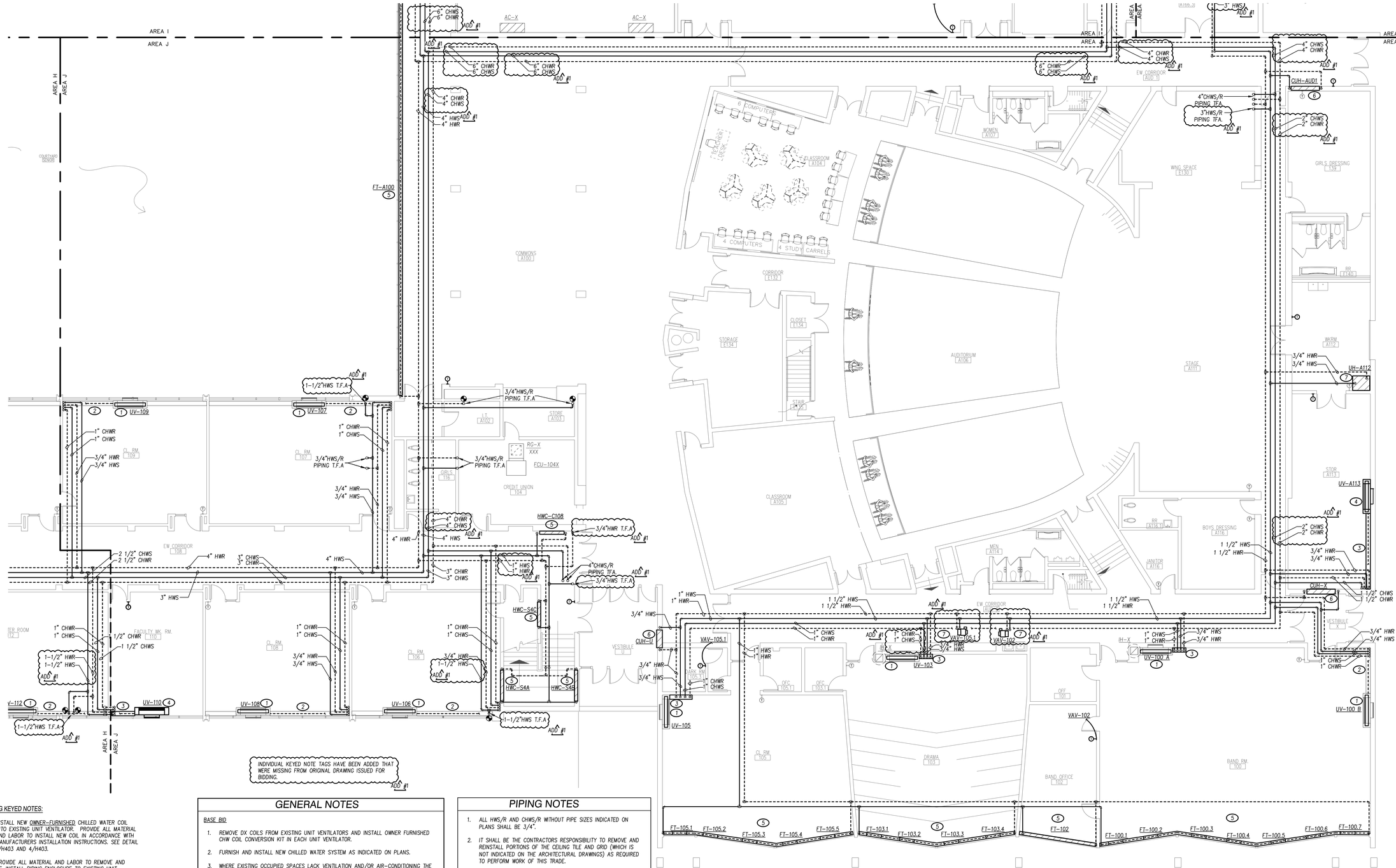

INDIVIDUAL KEYED NOTE TAGS HAVE BEEN ADDED THAT WERE MISSING FROM ORIGINAL DRAWING ISSUED FOR BIDDING.
ADD #1

HEATING KEYED NOTES:

1. INSTALL NEW OWNER-FURNISHED CHILLED WATER COIL INTO EXISTING UNIT VENTILATOR. PROVIDE ALL MATERIAL AND LABOR TO INSTALL NEW COIL IN ACCORDANCE WITH MANUFACTURERS INSTALLATION INSTRUCTIONS. SEE DETAIL 1/H403 AND 4/H403.
2. PROVIDE ALL MATERIAL AND LABOR TO REMOVE AND RE-INSTALL PIPING ENCLOSURE TO EXISTING UNIT VENTILATORS AND CUT AN OPENING IN EXISTING ENCLOSURE TO ALLOW FOR THE INSTALLATION OF NEW CHILLED WATER PIPING INTO EXISTING PIPING ENCLOSURE.
3. FURNISH AND INSTALL PRE-MANUFACTURED PIPING ENCLOSURE (VULCAN MODEL LV4-T20 WO/LOUVERS OR APPROVED EQUALS) AS REQUIRED TO CONCEAL NEW PIPING. PROVIDE NEW HANGERS, CLIPS, END CAPS, ETC. SUBMIT PRE-FINISHED PIPE ENCLOSURE COLOR SAMPLES TO BE APPROVED BY ARCHITECT.
4. FURNISH AND INSTALL NEW VERTICAL UNIT VENTILATOR AS INDICATED ON DRAWINGS. SEE DETAIL 1/H403, 7/H403 AND 8/H403.
5. FURNISH AND INSTALL NEW FINNED TUBE RADIATOR/ RECESSED HOT WATER CONVECTOR AND ASSOCIATED HWS/R PIPING AS INDICATED ON DRAWINGS, SEE DETAIL 5/H403.
6. FURNISH AND INSTALL NEW RECESSED CABINET UNIT HEATER W/ 2-WAY VALVE AND ASSOCIATED HWS/R PIPING AS INDICATED ON DRAWINGS, SEE DETAILS, 3/H403.
7. FURNISH AND INSTALL NEW UNIT HEATER W/ 2-WAY VALVE AND ASSOCIATED HWS/R PIPING AS INDICATED ON DRAWINGS, SEE DETAILS, 3/H403.

GENERAL NOTES

BASE BID

1. REMOVE DX COILS FROM EXISTING UNIT VENTILATORS AND INSTALL OWNER FURNISHED CHW COIL CONVERSION KIT IN EACH UNIT VENTILATOR.
2. FURNISH AND INSTALL NEW CHILLED WATER SYSTEM AS INDICATED ON PLANS.
3. WHERE EXISTING OCCUPIED SPACES LACK VENTILATION AND/OR AIR-CONDITIONING THE HEATING SYSTEM MAY BE REVISED TO PROVIDE FOR VENTILATION AND AIR-CONDITIONING. REFER TO KEYED NOTES ON PLANS.

ALTERNATE BID #1

1. PROVIDE FOR A COMPREHENSIVE REPLACEMENT OF ENTIRE HEATING SYSTEM OUTSIDE OF EXISTING BOILER ROOM. ALL EXISTING ACCESSIBLE HEATING HOT WATER SUPPLY AND RETURN PIPING SHALL BE REMOVED AND REPLACED PER THE DRAWINGS.
2. ALL EXISTING HEATING UNITS SUCH AS FINNED TUBE RADIATORS, CABINET UNIT HEATERS, AND HOT WATER CONVECTORS SHALL BE REPLACED AS PART OF THE COMPREHENSIVE HEATING SYSTEM REPLACEMENT.
3. ALL EXISTING ACCESSIBLE PNEUMATIC CONTROL TUBING AND PNEUMATIC MAIN AIR TUBING OUTSIDE THE BOILER ROOM IS TO BE REMOVED IN ITS ENTIRETY. (EXCEPTION: EXISTING MAIN CONTROL AIR TO POOL EQUIPMENT ROOM SHALL REMAIN.) UNDER ALTERNATE BID #1, ALL EXISTING HVAC EQUIPMENT WILL BE CONVERTED TO DDC CONTROL WITH ELECTRIC ACTUATION.
4. LOW PRESSURE STEAM AND CONDENSATE RETURN PIPING SYSTEMS SERVING THE POOL EQUIPMENT ROOM SHALL REMAIN.
5. NOTE: BID ALL EXISTING NOTE: THE ALTERNATE BID DRAWINGS INCLUDE BOTH BASE BID WORK AND ALTERNATE BID #1 WORK.

PIPING NOTES

1. ALL HWS/R AND CHWS/R WITHOUT PIPE SIZES INDICATED ON PLANS SHALL BE 3/4".
2. IT SHALL BE THE CONTRACTORS RESPONSIBILITY TO REMOVE AND REINSTALL PORTIONS OF THE CEILING TILE AND GRID (WHICH IS NOT INDICATED ON THE ARCHITECTURAL DRAWINGS) AS REQUIRED TO PERFORM WORK OF THIS TRADE.

FT-105.1 FT-105.2 FT-105.3 FT-105.4 FT-105.5 FT-103.1 FT-103.2 FT-103.3 FT-103.4 FT-102 FT-100.1 FT-100.2 FT-100.3 FT-100.4 FT-100.5 FT-100.6 FT-100.7

1 ALTERNATE BID # 1
FIRST FLOOR PLAN - HEATING NEW WORK - AREA J
SCALE: 1/8" = 1'-0"

NORTH

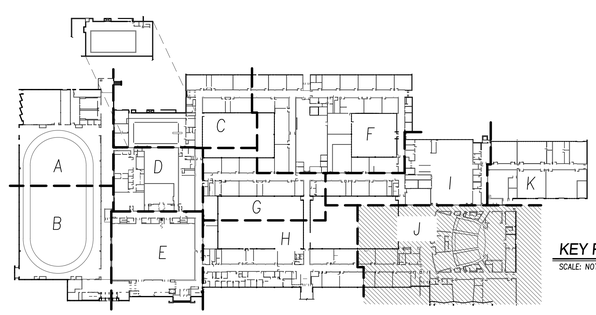

KEY PLAN
SCALE: NOT TO SCALE

NORTH

DATE: 2/21/2022

KEITH Engineering Design
www.keithep.com
300 1000 40th Ave Moline, IL 61265
309 764-4005 office
309 214-4083 fax
707 SE Jefferson Ave Peoria, IL 61603

ROCKFORD PUBLIC SCHOOLS

FEHR GRAHAM ENGINEERING & ENVIRONMENTAL
230 WOODLAWN AVENUE
AURORA, ILLINOIS 60506

Saavedra Group Architects
504 N. CHURCH STREET
ROCKFORD, ILLINOIS 61103

No.	Date	Revisions
1	3/17/2022	ADDENDUM 1

GUILFORD HIGH SCHOOL
HVAC UPGRADE
ROCKFORD, ILLINOIS

Sheet Title:
FIRST FLOOR PLAN - HEATING
NEW WORK - AREA J
ALTERNATE BID # 1

Proj. No.: 2251
Date: 02/21/2022
Drawn: GBW
Approved: RCR
Sheet No.: H111.A

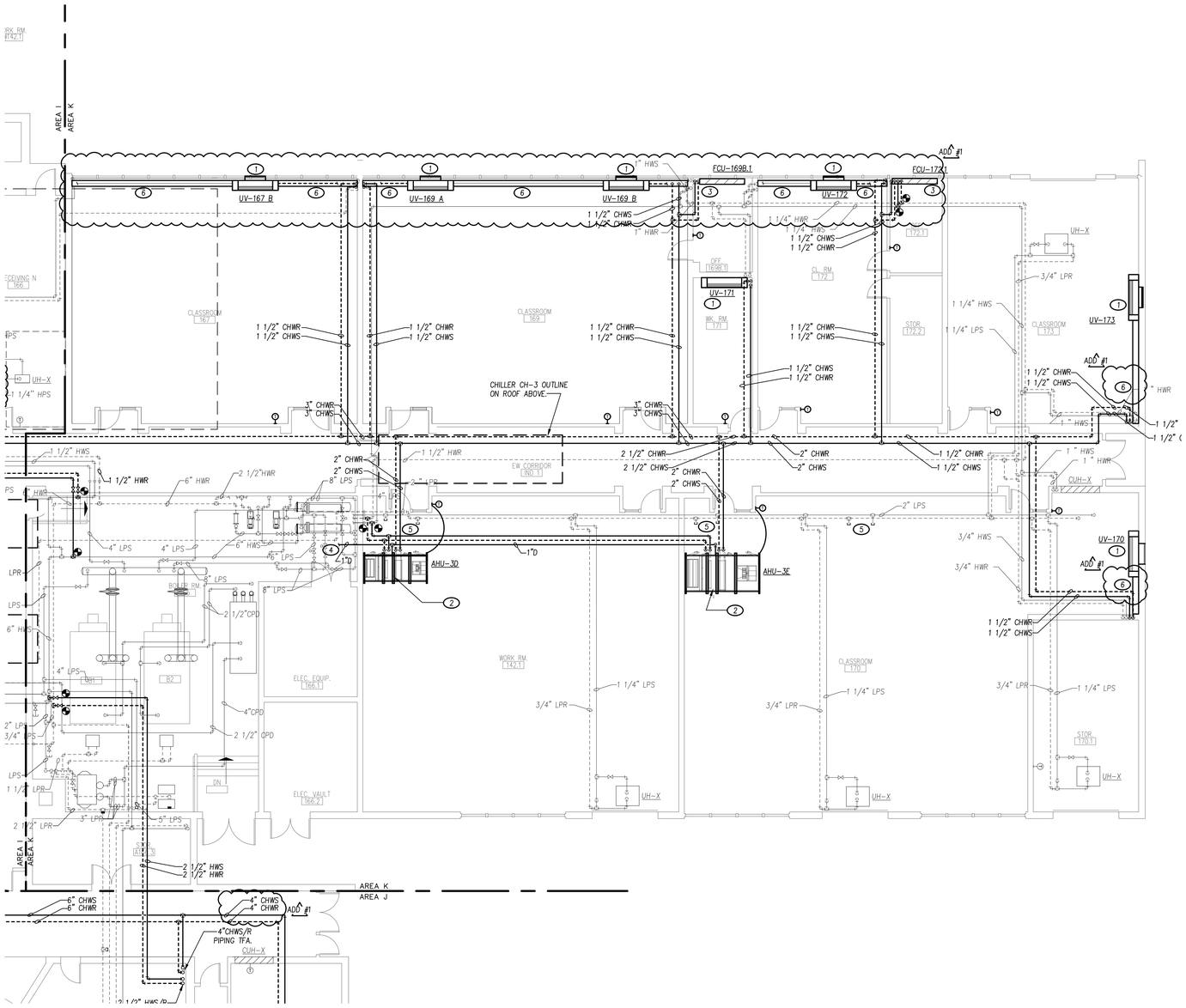

GENERAL NOTES

BASE BID

1. REMOVE DX COILS FROM EXISTING UNIT VENTILATORS AND INSTALL OWNER FURNISHED CHW COIL CONVERSION KIT IN EACH UNIT VENTILATOR.
2. FURNISH AND INSTALL NEW CHILLED WATER SYSTEM AS INDICATED ON PLANS.
3. WHERE EXISTING OCCUPIED SPACES LACK VENTILATION AND/OR AIR-CONDITIONING THE HEATING SYSTEM MAY BE REVISED TO PROVIDE FOR VENTILATION AND AIR-CONDITIONING. REFER TO KEYED NOTES ON PLANS.

ALTERNATE BID #1

1. ALL EXISTING HEATING HOT WATER SUPPLY/RETURN PIPING AND HEATING EQUIPMENT TO BE REMOVED AND REPLACED AS INDICATED ON DRAWINGS.
2. REFER TO DRAWING H11K.A FOR NEW HEATING WORK UNDER ALTERNATE BID #1.

HEATING KEYED NOTES:

1. FURNISH AND INSTALL NEW VERTICAL UNIT VENTILATOR AS INDICATED ON DRAWINGS. SEE DETAIL 1/H403, 7/H403 AND 8/H403.
2. FURNISH AND INSTALL NEW AIR-HANDLING UNIT SUSPENDED FROM STRUCTURE ABOVE. SEE DETAILS 1/H401 AND 2/H401.
3. FURNISH AND INSTALL NEW VERTICAL FAN COIL UNIT, AND ASSOCIATED CHWS/R AND HWS/R PIPING AS INDICATED ON DRAWINGS, SEE DETAIL 1/H403.
4. ROUTE 1" DRAIN PIPING TO FLOOR DRAIN IN EXISTING BOILER ROOM.
5. CAP EXISTING STEAM AND CONDENSATE PIPING.
6. FURNISH AND INSTALL PRE-MANUFACTURED PIPING ENCLOSURE (VULCAN MODEL LV4-T20 WO/LOUVERS OR APPROVED EQUALS) AS REQUIRED TO CONCEAL NEW PIPING. PROVIDE NEW HANGERS, CLIPS, END CAPS, ETC. SUBMIT PRE-FINISHED PIPE ENCLOSURE COLOR SAMPLES TO BE APPROVED BY ARCHITECT.

ADD #1

PIPING NOTES

1. ALL HWS/R AND CHWS/R WITHOUT PIPE SIZES INDICATED ON PLANS SHALL BE 3/4".
2. IT SHALL BE THE CONTRACTORS RESPONSIBILITY TO REMOVE AND REINSTALL PORTIONS OF THE CEILING TILE AND GRID (WHICH IS NOT INDICATED ON THE ARCHITECTURAL DRAWINGS) AS REQUIRED TO PERFORM WORK OF THIS TRADE.

1 FIRST FLOOR PLAN - HEATING NEW WORK - AREA K
SCALE: 1/8" = 1'-0"
NORTH

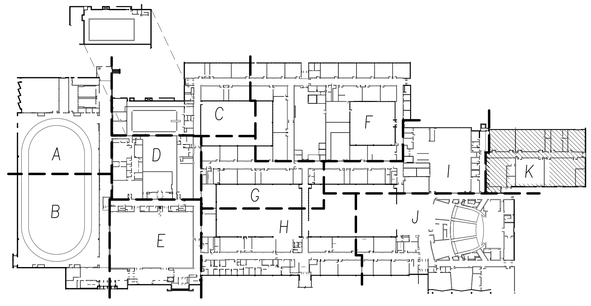

KEY PLAN
SCALE: NOT TO SCALE
NORTH

DATE: 2/21/2022

KEITH Engineering Design
www.keithmep.com
707 NE Jefferson Ave
Peoria, IL 61603
309 / 698-4005 : office
309 / 214-0063 : fax

ROCKFORD PUBLIC SCHOOLS
Saavedra Group Architects
504 N CHURCH STREET
ROCKFORD, ILLINOIS 61103
FEHR GRAHAM
ENGINEERING & ENVIRONMENTAL
230 WOODLAWN AVENUE
AURORA, ILLINOIS 60506

No.	Date	Revisions
1	3/17/2022	ADDENDUM 1

GUILFORD HIGH SCHOOL
HVAC UPGRADE
ROCKFORD, ILLINOIS

Sheet Title: FIRST FLOOR PLAN - HEATING NEW WORK - AREA K

Proj. No.: 2251
Date: 02/21/2022
Drawn: GBW
Approved: RCR
Sheet No.: H11K

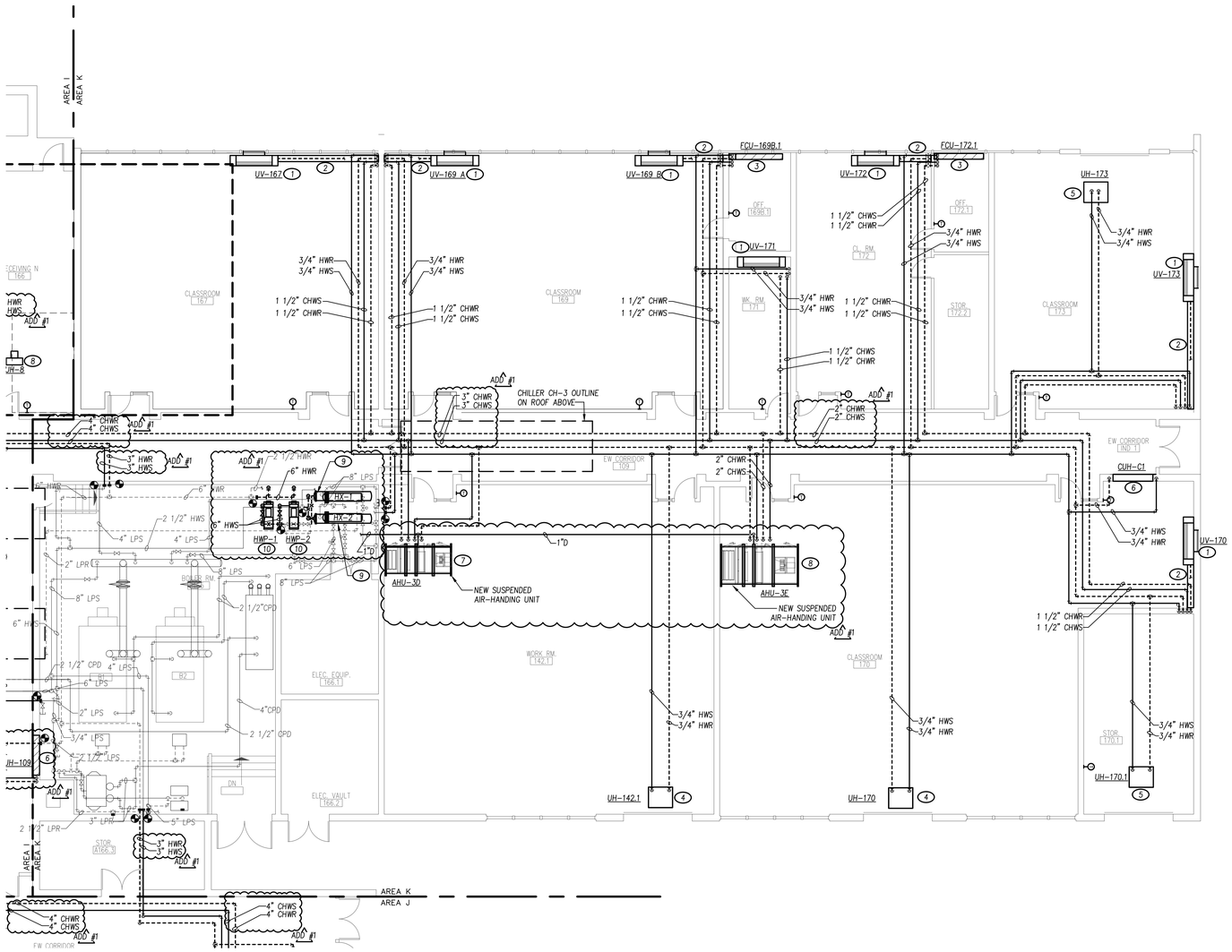

1 ALTERNATE BID # 1
FIRST FLOOR PLAN - HEATING NEW WORK - AREA K
SCALE: 1/8" = 1'-0"

NORTH

INDIVIDUAL KEYED NOTE TAGS HAVE BEEN ADDED THAT WERE MISSING FROM ORIGINAL DRAWING ISSUED FOR BIDDING.
ADD #1

HEATING KEYED NOTES:

1. FURNISH AND INSTALL NEW VERTICAL UNIT VENTILATOR AS INDICATED ON DRAWINGS. SEE DETAIL 1/H403, 7/H403 AND 8/H403.
2. FURNISH AND INSTALL PRE-MANUFACTURED PIPING ENCLOSURE (VULCAN MODEL LV4-T20 WO/LOUVERS OR APPROVED EQUALS) AS REQUIRED TO CONCEAL NEW PIPING. PROVIDE NEW HANGERS, CLIPS, END CAPS, ETC. SUBMIT PRE-FINISHED PIPE ENCLOSURE COLOR SAMPLES TO BE APPROVED BY ARCHITECT.
3. FURNISH AND INSTALL NEW VERTICAL FAN COIL UNIT, AND ASSOCIATED CHWS/R AND HWS/R PIPING AS INDICATED ON DRAWINGS, SEE DETAIL 1/H403.
4. FURNISH AND INSTALL NEW UNIT HEATER W/ 2-WAY VALVE AND ASSOCIATED HWS/R PIPING AS INDICATED ON DRAWINGS, SEE DETAILS, 3/H403.
5. FURNISH AND INSTALL NEW UNIT HEATER W/ 3-WAY VALVE AND ASSOCIATED HWS/R PIPING AS INDICATED ON DRAWINGS, SEE DETAILS, 2/H403.
6. FURNISH AND INSTALL NEW RECESSED CABINET UNIT HEATER W/ 2-WAY VALVE AND ASSOCIATED HWS/R PIPING AS INDICATED ON DRAWINGS, SEE DETAILS, 3/H403.
7. FURNISH AND INSTALL NEW AIR HANDLING UNIT AHU-3D AND ALL ASSOCIATED PIPING AS INDICATED ON DRAWINGS. SEE DETAILS 1/H401, 8/H402, 9/H402.
8. FURNISH AND INSTALL NEW AIR HANDLING UNIT AHU-3E AND ALL ASSOCIATED PIPING AS INDICATED ON DRAWINGS. SEE DETAILS 2/H401, 8/H402, 9/H402.
9. FURNISH AND INSTALL NEW STEAM TO HOT WATER HEAT EXCHANGERS PER MANUFACTURER INSTRUCTIONS. NEW PIPE CONNECTIONS TO BE AS FOLLOWS: 6" HWS/R, 8" LPS, AND 2-1/2" LPR. SEE DETAILS 1/H402, 2/H402. PROVIDE ALL MATERIALS AND LABOR TO REINSTALL EXISTING STEAM SPECIALTIES AND PIPING PREVIOUSLY REMOVED.
10. FURNISH AND INSTALL NEW HOT WATER CIRCULATION PUMPS ON EXISTING CONCRETE PAD. PROVIDE ALL MATERIALS AND LABOR TO PIPE TO EXISTING CONNECTIONS AS SHOWN ON DRAWING. SEE DETAILS 7/401.

GENERAL NOTES

BASE BID

1. REMOVE DX COILS FROM EXISTING UNIT VENTILATORS AND INSTALL OWNER FURNISHED CHW COIL CONVERSION KIT IN EACH UNIT VENTILATOR.
2. FURNISH AND INSTALL NEW CHILLED WATER SYSTEM AS INDICATED ON PLANS.
3. WHERE EXISTING OCCUPIED SPACES LACK VENTILATION AND/OR AIR-CONDITIONING THE HEATING SYSTEM MAY BE REVISED TO PROVIDE FOR VENTILATION AND AIR-CONDITIONING. REFER TO KEYED NOTES ON PLANS.

ALTERNATE BID #1

1. PROVIDE FOR A COMPREHENSIVE REPLACEMENT OF ENTIRE HEATING SYSTEM OUTSIDE OF EXISTING BOILER ROOM. ALL EXISTING ACCESSIBLE HEATING HOT WATER SUPPLY AND RETURN PIPING SHALL BE REMOVED AND REPLACED PER THE DRAWINGS.
2. ALL EXISTING HEATING UNITS SUCH AS FINNED TUBE RADIATORS, CABINET UNIT HEATERS, AND HOT WATER CONVECTORS SHALL BE REPLACED AS PART OF THE COMPREHENSIVE HEATING SYSTEM REPLACEMENT.
3. ALL EXISTING ACCESSIBLE PNEUMATIC CONTROL TUBING AND PNEUMATIC MAIN AIR TUBING OUTSIDE THE BOILER ROOM IS TO BE REMOVED IN ITS ENTIRETY. (EXCEPTION: EXISTING MAIN CONTROL AIR TO POOL EQUIPMENT ROOM SHALL REMAIN.) UNDER ALTERNATE BID #1, ALL EXISTING HVAC EQUIPMENT WILL BE CONVERTED TO DDC CONTROL WITH ELECTRIC ACTUATION.
4. LOW PRESSURE STEAM AND CONDENSATE RETURN PIPING SYSTEMS SERVING THE POOL EQUIPMENT ROOM SHALL REMAIN.
5. NOTE: BID ALL EXISTING NOTE: THE ALTERNATE BID DRAWINGS INCLUDE BOTH BASE BID WORK AND ALTERNATE BID #1 WORK.

PIPING NOTES

1. ALL HWS/R AND CHWS/R WITHOUT PIPE SIZES INDICATED ON PLANS SHALL BE 3/4".
2. IT SHALL BE THE CONTRACTORS RESPONSIBILITY TO REMOVE AND REINSTALL PORTIONS OF THE CEILING TILE AND GRID (WHICH IS NOT INDICATED ON THE ARCHITECTURAL DRAWINGS) AS REQUIRED TO PERFORM WORK OF THIS TRADE.

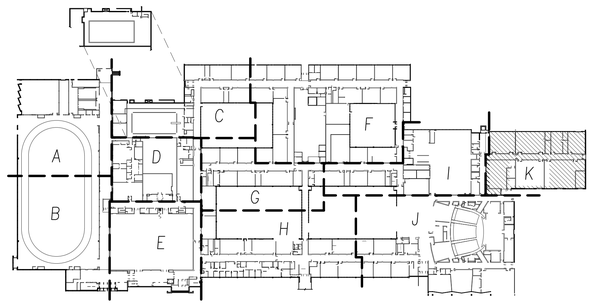

KEY PLAN
SCALE: NOT TO SCALE

NORTH

REGISTERED PROFESSIONAL ENGINEER
REGISTERED ARCHITECT
REG. NO. 062-056761
STATE OF ILLINOIS
DATE: 2/21/2022

KEITH Engineering Design
www.keithmep.com
707 SE Jefferson Ave. Peoria, IL 61603
309 / 808-4000 - office
309 / 214-4083 - fax

ROCKFORD PUBLIC SCHOOLS
FEHR GRAHAM
ENGINEERING & ENVIRONMENTAL
120 WOODLAWN AVENUE
AURORA, ILLINOIS 60506
Saavedra Group Architects
504 N. CHURCH STREET
ROCKFORD, ILLINOIS 61103

No.	Date	Revisions
1	3/17/2022	ADDENDUM 1

GUILFORD HIGH SCHOOL
HVAC UPGRADE
ROCKFORD, ILLINOIS

Sheet Title:
FIRST FLOOR PLAN - HEATING
NEW WORK - AREA K
ALTERNATE BID # 1

Proj. No.:	2251
Date:	02/21/2022
Drawn:	GBW
Approved:	RCR
Sheet No.:	H111K.A

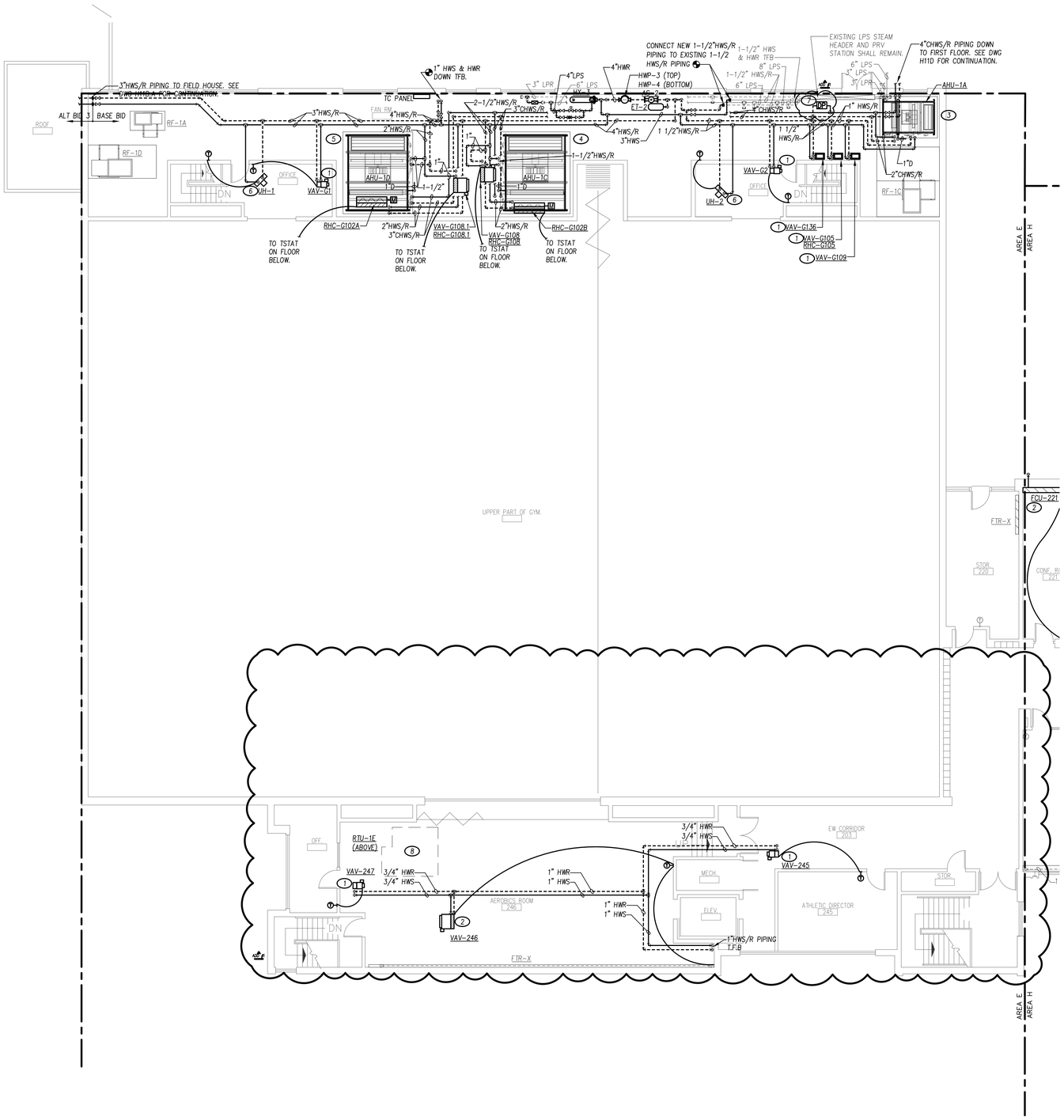

GENERAL NOTES (MECH RM)

BASE BID

1. REPLACE ALL EXISTING AIR-HANDLING UNITS, RETURN-FANS AND DUCTWORK AS INDICATED ON DRAWINGS.
2. FURNISH AND INSTALL NEW CHILLED WATER SYSTEM AS INDICATED ON PLANS.
3. EXISTING MEZZANINE HOT WATER HEATING SYSTEM SHALL BE REPLACED WITH A NEW HOT WATER HEATING SYSTEM SO NEW, AIR-HANDLING UNITS, REHEAT COILS AND VAV COILS ARE ALL SERVED WITH HEATING HOT WATER.

ALTERNATE BID #1

1. DEMOLISH AND REMOVE ALL EXISTING STEAM AND CONDENSATE PIPING AND REPLACE WITH NEW HOT WATER HEATING SUPPLY AND RETURN PIPING AS INDICATED ON PLANS.
2. NOTE: UNDER ALT BID #1 THE NEW HOT WATER HEATING SYSTEM IN THE MEZZANINE SHOWN UNDER BASE BID IS BEING DELETED AS THE MEZZANINE WILL BE SERVED FROM THE EXISTING HIGH SCHOOL BOILER ROOM WITH NEW HOT WATER DISTRIBUTION.

PIPING NOTES

1. ALL HWS/R AND CHWS/R WITHOUT PIPE SIZES INDICATED ON PLANS SHALL BE 3/4".
2. IT SHALL BE THE CONTRACTORS RESPONSIBILITY TO REMOVE AND REINSTALL PORTIONS OF THE CEILING TILE AND GRID (WHICH IS NOT INDICATED ON THE ARCHITECTURAL DRAWINGS) AS REQUIRED TO PERFORM WORK OF THIS TRADE.

INDIVIDUAL KEYED NOTE TAGS HAVE BEEN ADDED THAT WERE MISSING FROM ORIGINAL DRAWING ISSUED FOR BIDDING.

ADD. #1

HEATING KEYED NOTES:

1. FURNISH AND INSTALL NEW HOT WATER REHEAT VARIABLE AIR VOLUME BOX W/ 2-WAY VALVE AND ASSOCIATED HWS/R PIPING AS INDICATED ON DRAWINGS, SEE DETAILS, 3/H403.
2. FURNISH AND INSTALL NEW HOT WATER REHEAT VARIABLE AIR VOLUME BOX W/ 3-WAY VALVE AND ASSOCIATED HWS/R PIPING AS INDICATED ON DRAWINGS, SEE DETAILS, 2/H403.
3. FURNISH AND INSTALL NEW AIR HANDLING UNIT AHU-1A AND ALL ASSOCIATED PIPING AS INDICATED ON DRAWINGS. SEE DETAILS 1/H400, 8/H402, 9/H402.
4. FURNISH AND INSTALL NEW AIR HANDLING UNIT AHU-1C AND ALL ASSOCIATED PIPING AS INDICATED ON DRAWINGS. SEE DETAILS 2/H400, 4/H402, 5/H402.
5. FURNISH AND INSTALL NEW AIR HANDLING UNIT AHU-1D AND ALL ASSOCIATED PIPING AS INDICATED ON DRAWINGS. SEE DETAILS 3/H400, 4/H402, 9/H402.
6. FURNISH AND INSTALL NEW UNIT HEATER W/ 2-WAY VALVE AND ASSOCIATED HWS/R PIPING AS INDICATED ON DRAWINGS, SEE DETAILS, 3/H403.
7. FURNISH AND INSTALL NEW DIFFERENTIAL PRESSURE SENSOR.
8. FURNISH AND INSTALL NEW ROOF-TOP UNIT, RTU-1E ON NEW ROOF CURB PER MANUFACTURER'S INSTALLATION INSTRUCTIONS. COORDINATE EXACT LOCATION WITH NEW STRUCTURAL SUPPORTS.

1 SECOND FLOOR PLAN - HEATING NEW WORK - AREA E
SCALE: 1/8" = 1'-0"

NORTH

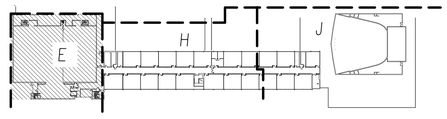

KEY PLAN
SCALE: NOT TO SCALE

NORTH

STATE OF ILLINOIS — REGISTERED PROFESSIONAL ENGINEER — EXPIRES: 11/30/2023 — REF: 062-056761
DATE: 2/21/2022

KEITH Engineering Design
www.keithmep.com
707 SE Jefferson Ave, Peoria, IL 61603
309.1630.4000 - office
309.714.0063 - fax

ROCKFORD PUBLIC SCHOOLS
FEHR GRAHAM
ENGINEERING & ENVIRONMENTAL
120 WOODLAWN AVENUE
AURORA, ILLINOIS 60506

Saavedra Group Architects
504 N. CHURCH STREET
ROCKFORD, ILLINOIS 61103

Revisions

No.	Date	
1	3/17/2022	ADDENDUM 1

GUILFORD HIGH SCHOOL
HVAC UPGRADE
ROCKFORD, ILLINOIS

Sheet Title:
SECOND FLOOR PLAN
HEATING
NEW WORK - AREA E

Proj. No.: 2251
Date: 02/21/2022
Drawn: GBW
Approved: RCR
Sheet No.: H12E

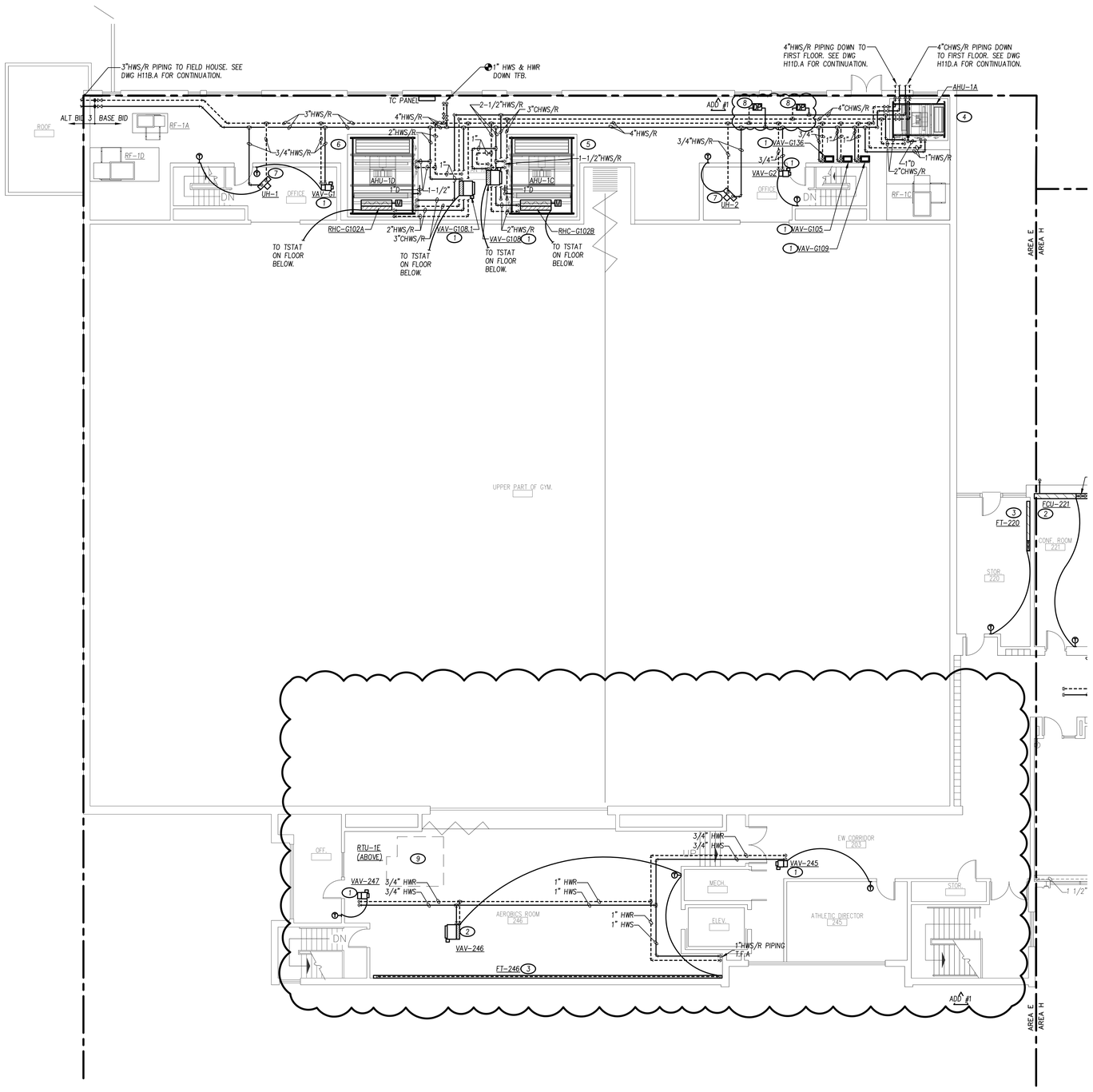

GENERAL NOTES (MECH RM)

BASE BID

1. REPLACE ALL EXISTING AIR-HANDLING UNITS, RETURN-FANS AND DUCTWORK AS INDICATED ON DRAWINGS.
2. FURNISH AND INSTALL NEW CHILLED WATER SYSTEM AS INDICATED ON PLANS.
3. EXISTING MEZZANINE HOT WATER HEATING SYSTEM SHALL BE REPLACED WITH A NEW HOT WATER HEATING SYSTEM SO NEW, AIR-HANDLING UNITS, REHEAT COILS AND VAV COILS ARE ALL SERVED WITH HEATING HOT WATER.

ALTERNATE BID #1

1. DEMOLISH AND REMOVE ALL EXISTING STEAM AND CONDENSATE PIPING AND REPLACE WITH NEW HOT WATER HEATING SUPPLY AND RETURN PIPING AS INDICATED ON PLANS.
2. NOTE: UNDER ALT BID #1 THE NEW HOT WATER HEATING SYSTEM IN THE MEZZANINE SHOWN UNDER BASE BID IS BEING DELETED AS THE MEZZANINE WILL BE SERVED FROM THE EXISTING HIGH SCHOOL BOILER ROOM WITH NEW HOT WATER DISTRIBUTION.

PIPING NOTES

1. ALL HWS/R AND CHWS/R WITHOUT PIPE SIZES INDICATED ON PLANS SHALL BE 3/4".
2. IT SHALL BE THE CONTRACTORS RESPONSIBILITY TO REMOVE AND REINSTALL PORTIONS OF THE CEILING TILE AND GRID (WHICH IS NOT INDICATED ON THE ARCHITECTURAL DRAWINGS) AS REQUIRED TO PERFORM WORK OF THIS TRADE.

INDIVIDUAL KEYED NOTE TAGS HAVE BEEN ADDED THAT WERE MISSING FROM ORIGINAL DRAWING ISSUED FOR BIDDING. ADD #1

HEATING KEYED NOTES:

1. FURNISH AND INSTALL NEW HOT WATER REHEAT VARIABLE AIR VOLUME BOX W/ 2-WAY VALVE AND ASSOCIATED HWS/R PIPING AS INDICATED ON DRAWINGS, SEE DETAILS, 3/H403.
2. FURNISH AND INSTALL NEW HOT WATER REHEAT VARIABLE AIR VOLUME BOX W/ 3-WAY VALVE AND ASSOCIATED HWS/R PIPING AS INDICATED ON DRAWINGS, SEE DETAILS, 2/H403.
3. FURNISH AND INSTALL NEW FINNED TUBE RADIATOR/ RECESSED HOT WATER CONVECTOR AND ASSOCIATED HWS/R PIPING AS INDICATED ON DRAWINGS, SEE DETAIL 6/H403.
4. FURNISH AND INSTALL NEW AIR HANDLING UNIT AHU-1A AND ALL ASSOCIATED PIPING AS INDICATED ON DRAWINGS. SEE DETAILS 1/H400, 8/H402, 9/H402.
5. FURNISH AND INSTALL NEW AIR HANDLING UNIT AHU-1C AND ALL ASSOCIATED PIPING AS INDICATED ON DRAWINGS. SEE DETAILS 2/H400, 4/H402, 5/H402.
6. FURNISH AND INSTALL NEW AIR HANDLING UNIT AHU-1D AND ALL ASSOCIATED PIPING AS INDICATED ON DRAWINGS. SEE DETAILS 3/H400, 4/H402, 5/H402.
7. FURNISH AND INSTALL NEW UNIT HEATER W/ 2-WAY VALVE AND ASSOCIATED HWS/R PIPING AS INDICATED ON DRAWINGS, SEE DETAILS, 3/H403.
8. FURNISH AND INSTALL NEW DIFFERENTIAL PRESSURE SENSOR.
9. FURNISH AND INSTALL NEW ROOF-TOP UNIT, RTU-1E ON NEW ROOF CURB PER MANUFACTURER'S INSTALLATION INSTRUCTIONS. COORDINATE EXACT LOCATION WITH NEW STRUCTURAL SUPPORTS.

ADD #1

1 ALTERNATE BID #1
SECOND FLOOR PLAN - HEATING NEW WORK - AREA E
SCALE: 1/8" = 1'-0"

NORTH

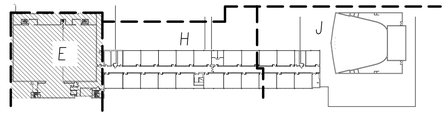

KEY PLAN
SCALE: NOT TO SCALE

NORTH

RYAN C. ROCK
REG. NO. 062-056761
LICENSED PROFESSIONAL ENGINEER
STATE OF ILLINOIS
DATE: 2/21/2022

KEITH Engineering Design
www.keithmep.com
707 SE Jefferson Ave. Suite 100 Peoria, IL 61603
309.688.4000 office
309.714.0063 fax

ROCKFORD PUBLIC SCHOOLS
FEHR GRAHAM
ENGINEERING & ENVIRONMENTAL
230 WOODLAWN AVENUE AURORA, ILLINOIS 60506

Saavedra Group Architects
504 N. CHURCH STREET ROCKFORD, ILLINOIS 61103

Revisions

No.	Date	
1	3/17/2022	ADDENDUM 1

GUILFORD HIGH SCHOOL
HVAC UPGRADE
ROCKFORD, ILLINOIS

Sheet Title:
SECOND FLOOR PLAN
HEATING
NEW WORK - AREA E
ALTERNATE BID #1

Proj. No.: 2251
Date: 02/21/2022
Drawn: GBW
Approved: RCR
Sheet No.: H12E.A

GENERAL NOTES

BASE BID

1. REMOVE DX COILS FROM EXISTING UNIT VENTILATORS AND INSTALL OWNER FURNISHED CHW COIL CONVERSION KIT IN EACH UNIT VENTILATOR.
2. FURNISH AND INSTALL NEW CHILLED WATER SYSTEM AS INDICATED ON PLANS.
3. WHERE EXISTING OCCUPIED SPACES LACK VENTILATION THE HEATING SYSTEM MAY BE REVISED TO PROVIDE FOR VENTILATION AND AIR-CONDITIONING. REFER TO KEYED NOTES ON PLANS.

ALTERNATE BID

1. NO WORK - UNLESS SPECIFIC HEATING UNITS ARE IDENTIFIED FOR REPLACEMENT (I.E. FINNED TUBE RADIATORS, CABINET UNIT HEATERS, ETC.) AS PART OF THE COMPREHENSIVE HEATING SYSTEM REPLACEMENT.
2. NOTE: EXISTING HORIZONTAL HWS/R PIPING ALONG EXTERIOR WALL WAS RECENTLY UPGRADED AND DOES NOT REQUIRE REPLACEMENT UNDER ALTERNATE BID.

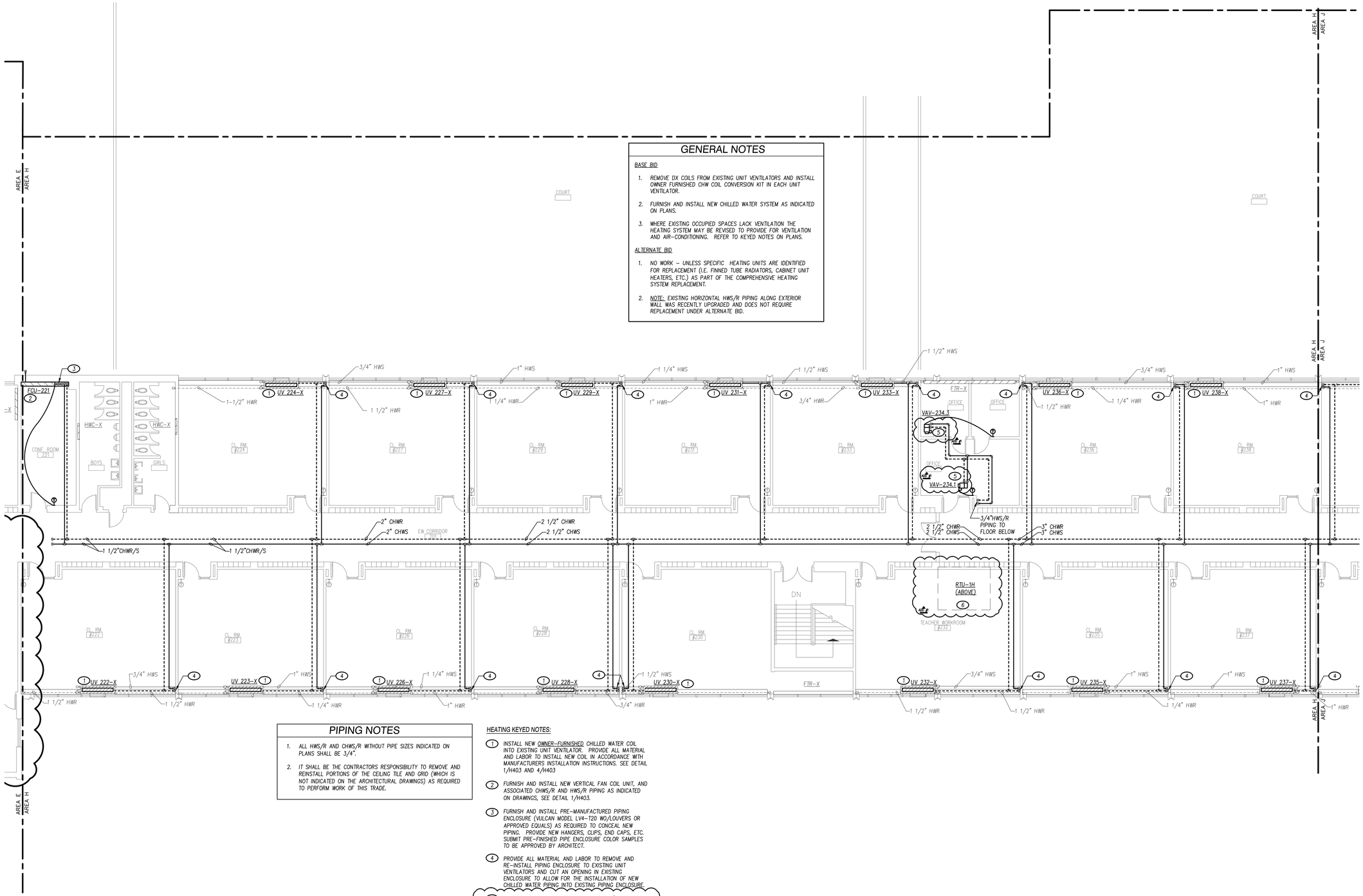

PIPING NOTES

1. ALL HWS/R AND CHWS/R WITHOUT PIPE SIZES INDICATED ON PLANS SHALL BE 3/4".
2. IT SHALL BE THE CONTRACTORS RESPONSIBILITY TO REMOVE AND REINSTALL PORTIONS OF THE CEILING TILE AND GRID (WHICH IS NOT INDICATED ON THE ARCHITECTURAL DRAWINGS) AS REQUIRED TO PERFORM WORK OF THIS TRADE.

HEATING KEYED NOTES:

1. INSTALL NEW OWNER-FURNISHED CHILLED WATER COIL INTO EXISTING UNIT VENTILATOR. PROVIDE ALL MATERIAL AND LABOR TO INSTALL NEW COIL IN ACCORDANCE WITH MANUFACTURERS INSTALLATION INSTRUCTIONS. SEE DETAIL 1/H403 AND 4/H403
2. FURNISH AND INSTALL NEW VERTICAL FAN COIL UNIT, AND ASSOCIATED CHWS/R AND HWS/R PIPING AS INDICATED ON DRAWINGS, SEE DETAIL 1/H403.
3. FURNISH AND INSTALL PRE-MANUFACTURED PIPING ENCLOSURE (VULCAN MODEL LV4-T20 WO/LOUVERS OR APPROVED EQUALS) AS REQUIRED TO CONCEAL NEW PIPING. PROVIDE NEW HANGERS, CLIPS, END CAPS, ETC. SUBMIT PRE-FINISHED PIPE ENCLOSURE COLOR SAMPLES TO BE APPROVED BY ARCHITECT.
4. PROVIDE ALL MATERIAL AND LABOR TO REMOVE AND RE-INSTALL PIPING ENCLOSURE TO EXISTING UNIT VENTILATORS AND CUT AN OPENING IN EXISTING ENCLOSURE TO ALLOW FOR THE INSTALLATION OF NEW CHILLED WATER PIPING INTO EXISTING PIPING ENCLOSURE.
5. FURNISH AND INSTALL NEW UNIT HEATER W/ 2-WAY VALVE AND ASSOCIATED HWS/R PIPING AS INDICATED ON DRAWINGS, SEE DETAILS, 3/H403.
6. FURNISH AND INSTALL NEW ROOF-TOP UNIT, RTU-1H ON NEW ROOF CURB PER MANUFACTURER'S INSTALLATION INSTRUCTIONS. COORDINATE EXACT LOCATION WITH NEW STRUCTURAL SUPPORTS.

1 SECOND FLOOR PLAN - HEATING NEW WORK - AREA H
SCALE: 1/8" = 1'-0"

NORTH

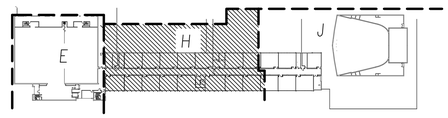

KEY PLAN
SCALE: NOT TO SCALE

NORTH

DATE: 2/21/2022

KEITH Engineering Design
www.keithmep.com
331 W. Jefferson Ave. Naperville, IL 60540
309 / 808-4000 - office
309 / 214-4060 - fax

ROCKFORD PUBLIC SCHOOLS
FEHR GRAHAM ENGINEERING & ENVIRONMENTAL
230 WOODLAWN AVENUE AURORA, ILLINOIS 60506
Saavedra Group Architects
504 N. CHURCH STREET ROCKFORD, ILLINOIS 61103

No.	Date	Revisions
1	3/17/2022	ADDENDUM 1

GUILFORD HIGH SCHOOL
HVAC UPGRADE
ROCKFORD, ILLINOIS

Sheet Title:
SECOND FLOOR PLAN - HEATING NEW WORK - AREA H

Proj. No.:	2251
Date:	02/21/2022
Drawn:	GBW
Approved:	RCR
Sheet No.:	H12H

PIPING NOTES

1. ALL HWS/R AND CHWS/R WITHOUT PIPE SIZES INDICATED ON PLANS SHALL BE 3/4".
2. IT SHALL BE THE CONTRACTORS RESPONSIBILITY TO REMOVE AND REINSTALL PORTIONS OF THE CEILING TILE AND GRID (WHICH IS NOT INDICATED ON THE ARCHITECTURAL DRAWINGS) AS REQUIRED TO PERFORM WORK OF THIS TRADE.

GENERAL NOTES

BASE BID

1. REMOVE DX COILS FROM EXISTING UNIT VENTILATORS AND INSTALL OWNER FURNISHED CHW COIL CONVERSION KIT IN EACH UNIT VENTILATOR.
2. FURNISH AND INSTALL NEW CHILLED WATER SYSTEM AS INDICATED ON PLANS.
3. WHERE EXISTING OCCUPIED SPACES LACK VENTILATION THE HEATING SYSTEM MAY BE REVISED TO PROVIDE FOR VENTILATION AND AIR-CONDITIONING. REFER TO KEYED NOTES ON PLANS.

ALTERNATE BID

1. NO WORK – UNLESS SPECIFIC HEATING UNITS ARE IDENTIFIED FOR REPLACEMENT (I.E. FINNED TUBE RADIATORS, CABINET UNIT HEATERS, ETC.) AS PART OF THE COMPREHENSIVE HEATING SYSTEM REPLACEMENT.
2. NOTE: EXISTING HORIZONTAL HWS/R PIPING ALONG EXTERIOR WALL WAS RECENTLY UPGRADED AND DOES NOT REQUIRE REPLACEMENT UNDER ALTERNATE BID.

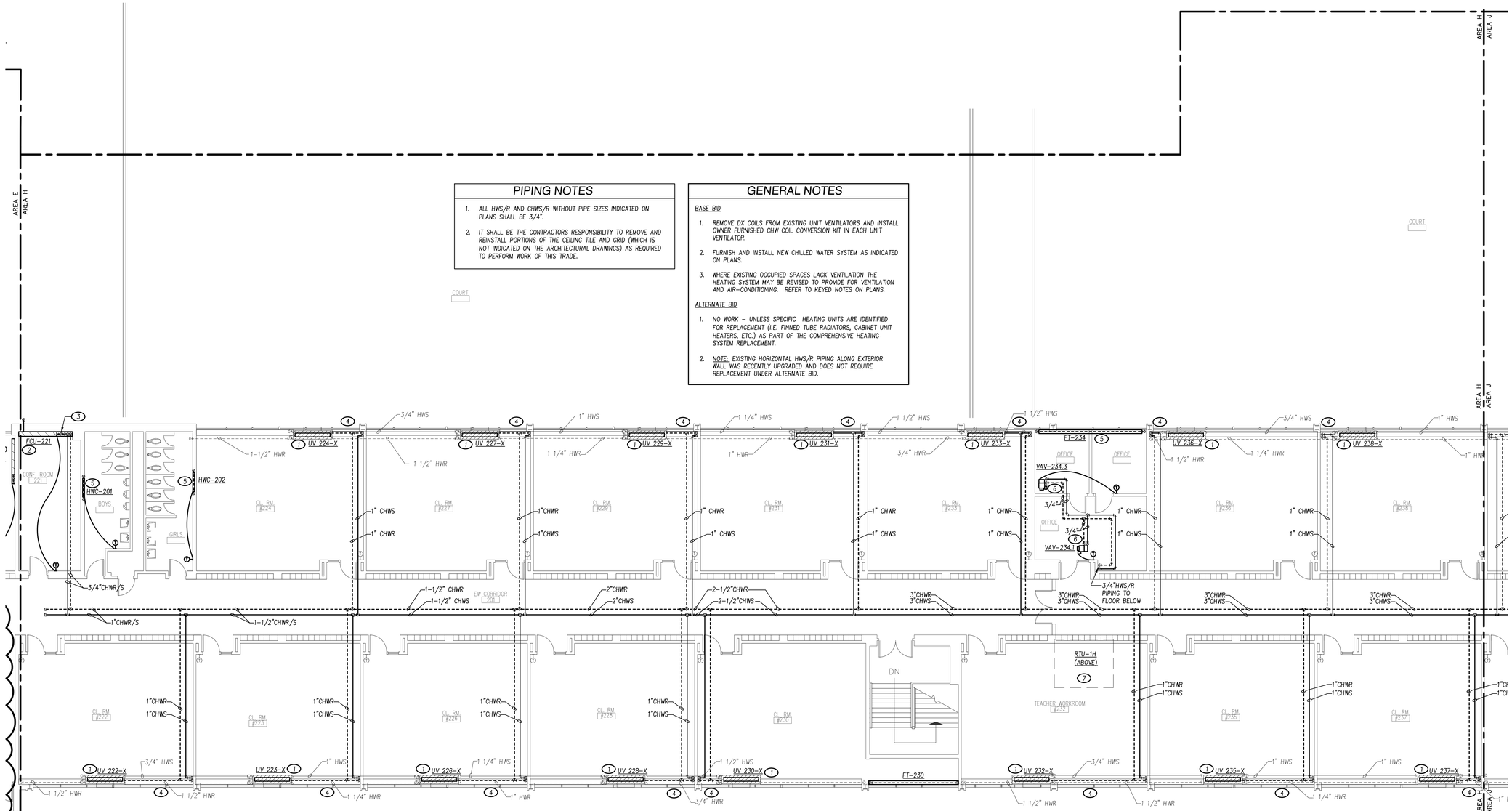

HEATING KEYED NOTES:

1. INSTALL NEW OWNER-FURNISHED CHILLED WATER COIL INTO EXISTING UNIT VENTILATOR. PROVIDE ALL MATERIAL AND LABOR TO INSTALL NEW COIL IN ACCORDANCE WITH MANUFACTURERS INSTALLATION INSTRUCTIONS. SEE DETAIL 1/H403 AND 4/H403
2. FURNISH AND INSTALL NEW VERTICAL FAN COIL UNIT, AND ASSOCIATED CHWS/R AND HWS/R PIPING AS INDICATED ON DRAWINGS, SEE DETAIL 1/H403.
3. FURNISH AND INSTALL PRE-MANUFACTURED PIPING ENCLOSURE (VULCAN MODEL LV4-T20 WO/LOUVERS OR APPROVED EQUALS) AS REQUIRED TO CONCEAL NEW PIPING. PROVIDE NEW HANGERS, CLIPS, END CAPS, ETC. SUBMIT PRE-FINISHED PIPE ENCLOSURE COLOR SAMPLES TO BE APPROVED BY ARCHITECT.
4. PROVIDE ALL MATERIAL AND LABOR TO REMOVE AND RE-INSTALL PIPING ENCLOSURE TO EXISTING UNIT VENTILATORS AND CUT AN OPENING IN EXISTING ENCLOSURE TO ALLOW FOR THE INSTALLATION OF NEW CHILLED WATER PIPING INTO EXISTING PIPING ENCLOSURE.
5. FURNISH AND INSTALL NEW FINNED TUBE RADIATOR/ RECESSED HOT WATER CONVECTOR AND ASSOCIATED HWS/R PIPING AS INDICATED ON DRAWINGS, SEE DETAIL 6/H403.
6. FURNISH AND INSTALL NEW UNIT HEATER W/ 2-WAY VALVE AND ASSOCIATED HWS/R PIPING AS INDICATED ON DRAWINGS, SEE DETAILS, 3/H403.
7. FURNISH AND INSTALL NEW ROOF-TOP UNIT, RTU-1H ON NEW ROOF CURB PER MANUFACTURER'S INSTALLATION INSTRUCTIONS. COORDINATE EXACT LOCATION WITH NEW STRUCTURAL SUPPORTS.

ADD #1

1 ALTERNATE BID #1
SECOND FLOOR PLAN - HEATING NEW WORK - AREA H
SCALE: 1/8" = 1'-0"

NORTH

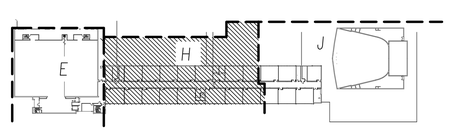

KEY PLAN
SCALE: NOT TO SCALE

NORTH

STATE OF ILLINOIS — REGISTERED PROFESSIONAL ENGINEER — REF: 062-056761 — EXPIRES: 11/30/2023
DATE: 2/21/2022

KEITH Engineering Design
www.keithmep.com
707 SE Jefferson Ave, Peoria, IL 61603
309.1694.4000 - office
309.714.4063 - fax

ROCKFORD PUBLIC SCHOOLS
FEHR GRAHAM ENGINEERING & ENVIRONMENTAL
230 WOODLAWN AVENUE AURORA, ILLINOIS 60506
Saavedra Group Architects
504 N. CHURCH STREET ROCKFORD, ILLINOIS 61103

No.	Date	Revisions
1	3/17/2022	ADDENDUM 1

GUILFORD HIGH SCHOOL HVAC UPGRADE

ROCKFORD, ILLINOIS

Sheet Title:
SECOND FLOOR PLAN - HEATING NEW WORK - AREA H ALTERNATE BID #1

Proj. No.:	2251
Date:	02/21/2022
Drawn:	GBW
Approved:	RCR
Sheet No.:	H12H.A

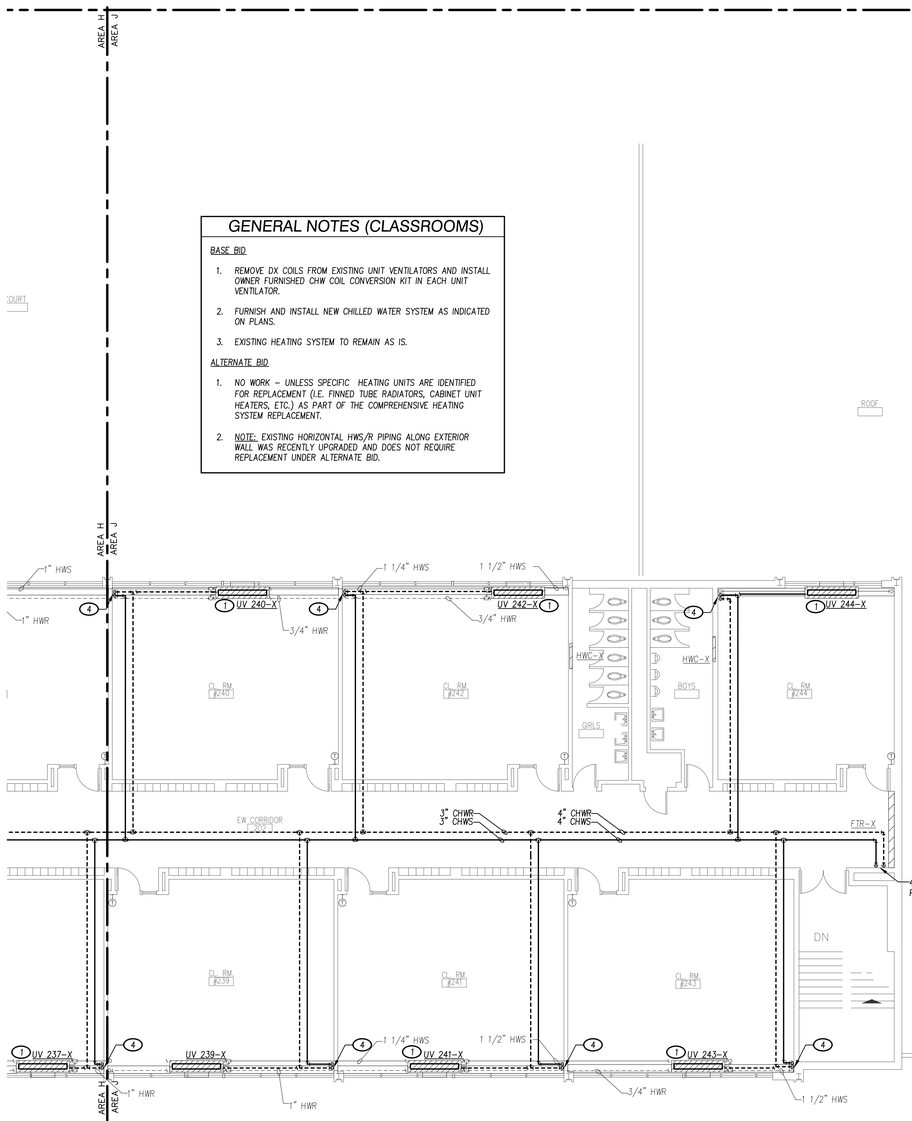

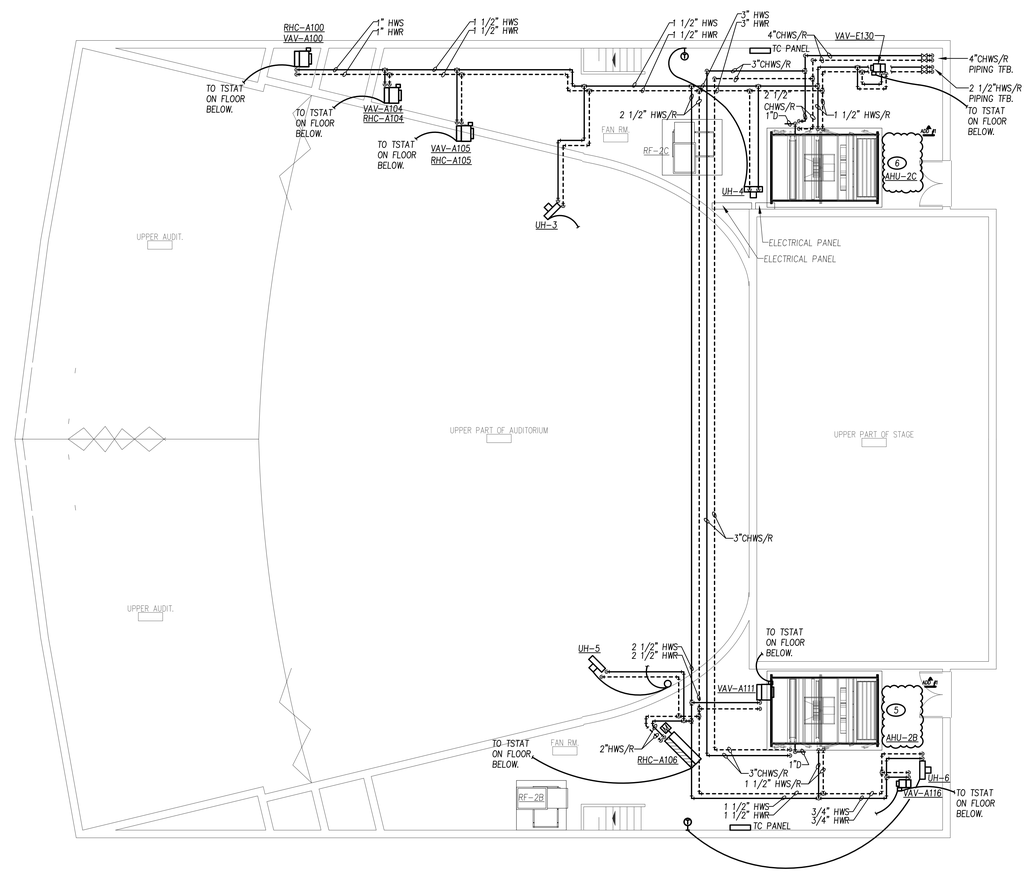

GENERAL NOTES (CLASSROOMS)

BASE BID

1. REMOVE DX COILS FROM EXISTING UNIT VENTILATORS AND INSTALL OWNER FURNISHED CHW COIL CONVERSION KIT IN EACH UNIT VENTILATOR.
2. FURNISH AND INSTALL NEW CHILLED WATER SYSTEM AS INDICATED ON PLANS.
3. EXISTING HEATING SYSTEM TO REMAIN AS IS.

ALTERNATE BID

1. NO WORK – UNLESS SPECIFIC HEATING UNITS ARE IDENTIFIED FOR REPLACEMENT (I.E. FINNED TUBE RADIATORS, CABINET UNIT HEATERS, ETC.) AS PART OF THE COMPREHENSIVE HEATING SYSTEM REPLACEMENT.
2. NOTE: EXISTING HORIZONTAL HWS/R PIPING ALONG EXTERIOR WALL WAS RECENTLY UPGRADED AND DOES NOT REQUIRE REPLACEMENT UNDER ALTERNATE BID.

PIPING NOTES

1. ALL HWS/R AND CHWS/R WITHOUT PIPE SIZES INDICATED ON PLANS SHALL BE 3/4".
2. IT SHALL BE THE CONTRACTORS RESPONSIBILITY TO REMOVE AND REINSTALL PORTIONS OF THE CEILING TILE AND GRID (WHICH IS NOT INDICATED ON THE ARCHITECTURAL DRAWINGS) AS REQUIRED TO PERFORM WORK OF THIS TRADE.

HEATING KEYED NOTES:

1. INSTALL NEW OWNER-FURNISHED CHILLED WATER COIL INTO EXISTING UNIT VENTILATOR. PROVIDE ALL MATERIAL AND LABOR TO INSTALL NEW COIL IN ACCORDANCE WITH MANUFACTURERS INSTALLATION INSTRUCTIONS. SEE DETAIL 1/H403 AND 4/H403
2. FURNISH AND INSTALL NEW VERTICAL FAN COIL UNIT, AND ASSOCIATED CHWS/R AND HWS/R PIPING AS INDICATED ON DRAWINGS, SEE DETAIL 1/H403.
3. FURNISH AND INSTALL PRE-MANUFACTURED PIPING ENCLOSURE (VULCAN MODEL LV4-T20 WO/LOUVERS OR APPROVED EQUALS) AS REQUIRED TO CONCEAL NEW PIPING. PROVIDE NEW HANGERS, CLIPS, END CAPS, ETC. SUBMIT PRE-FINISHED PIPE ENCLOSURE COLOR SAMPLES TO BE APPROVED BY ARCHITECT.
4. PROVIDE ALL MATERIAL AND LABOR TO REMOVE AND RE-INSTALL PIPING ENCLOSURE TO EXISTING UNIT VENTILATORS AND CUT AN OPENING IN EXISTING ENCLOSURE TO ALLOW FOR THE INSTALLATION OF NEW CHILLED WATER PIPING INTO EXISTING PIPING ENCLOSURE.
5. FURNISH AND INSTALL NEW AIR HANDLING UNIT AHU-2B AND ALL ASSOCIATED PIPING AS INDICATED ON DRAWINGS. SEE DETAILS 5/H400, 4/H402, 5/H402.
6. FURNISH AND INSTALL NEW AIR HANDLING UNIT AHU-2C AND ALL ASSOCIATED PIPING AS INDICATED ON DRAWINGS. SEE DETAILS 6/H400, 4/H402, 5/H402.

GENERAL NOTES (MECH RM)

BASE BID

1. REPLACE ALL EXISTING AIR-HANDLING UNITS, RETURN-FANS AND DUCTWORK AS INDICATED ON DRAWINGS.
2. FURNISH AND INSTALL NEW CHILLED WATER SYSTEM AS INDICATED ON PLANS.
3. UNDER BASE BID THE NEW HOT WATER HEATING SYSTEM IN THE MEZZANINE WILL BE SERVED FROM THE EXISTING HIGH SCHOOL BOILER ROOM WITH NEW HOT WATER DISTRIBUTION.
4. ALL EXISTING STEAM AND CONDENSATE PIPING TO BE REMOVED.

ALTERNATE BID #1

1. NO CHANGE IN WORK. BASE BID AND ALTERNATE BID #1 WORK IN THE AUDITORIUM MEZZANINE MECHANICAL ROOMS ARE IDENTICAL.

1 SECOND FLOOR PLAN - HEATING NEW WORK - AREA J
SCALE: 1/8" = 1'-0"

NORTH

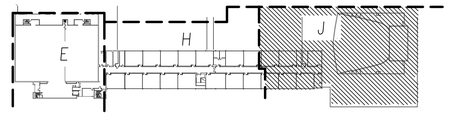

KEY PLAN
SCALE: NOT TO SCALE

NORTH

KEITH Engineering Design
www.keithmep.com
707 SE Jefferson Ave. Suite 1
Peoria, IL 61603
309.688.4000 office
309.214.4063 fax

ROCKFORD PUBLIC SCHOOLS
FEHR GRAHAM ENGINEERING & ENVIRONMENTAL
230 WOODLAWN AVENUE
AURORA, ILLINOIS 60506

Saavedra Group Architects
504 N. CHURCH STREET
ROCKFORD, ILLINOIS 61103

DATE: 2/21/2022

Revisions

No.	Date	
1	3/17/2022	ADDENDUM 1

GUILFORD HIGH SCHOOL
HVAC UPGRADE
ROCKFORD, ILLINOIS

Sheet Title:
SECOND FLOOR PLAN - HEATING NEW WORK - AREA J

Proj. No.: 2251
Date: 02/21/2022
Drawn: GBW
Approved: RCR
Sheet No.: H12J

PIPING NOTES

1. ALL HWS/R AND CHWS/R WITHOUT PIPE SIZES INDICATED ON PLANS SHALL BE 3/4".
2. IT SHALL BE THE CONTRACTORS RESPONSIBILITY TO REMOVE AND REINSTALL PORTIONS OF THE CEILING TILE AND GRID (WHICH IS NOT INDICATED ON THE ARCHITECTURAL DRAWINGS) AS REQUIRED TO PERFORM WORK OF THIS TRADE.

GENERAL NOTES (CLASSROOMS)

BASE BID

1. REMOVE DX COILS FROM EXISTING UNIT VENTILATORS AND INSTALL OWNER FURNISHED CHW COIL CONVERSION KIT IN EACH UNIT VENTILATOR.
2. FURNISH AND INSTALL NEW CHILLED WATER SYSTEM AS INDICATED ON PLANS.
3. WHERE EXISTING OCCUPIED SPACES LACK VENTILATION THE HEATING SYSTEM MAY BE REVISED TO PROVIDE FOR VENTILATION AND AIR-CONDITIONING. REFER TO KEYED NOTES ON PLANS..

ALTERNATE BID

1. NO WORK - UNLESS SPECIFIC HEATING UNITS ARE IDENTIFIED FOR REPLACEMENT (I.E. FINNED TUBE RADIATORS, CABINET UNIT HEATERS, ETC.) AS PART OF THE COMPREHENSIVE HEATING SYSTEM REPLACEMENT.
2. NOTE: EXISTING HORIZONTAL HWS/R PIPING ALONG EXTERIOR WALL WAS RECENTLY UPGRADED AND DOES NOT REQUIRE REPLACEMENT UNDER ALTERNATE BID.

HEATING KEYED NOTES:

1. INSTALL NEW OWNER-FURNISHED CHILLED WATER COIL INTO EXISTING UNIT VENTILATOR. PROVIDE ALL MATERIAL AND LABOR TO INSTALL NEW COIL IN ACCORDANCE WITH MANUFACTURERS INSTALLATION INSTRUCTIONS. SEE DETAIL 1/H403 AND 4/H403
2. FURNISH AND INSTALL NEW VERTICAL FAN COIL UNIT, AND ASSOCIATED CHWS/R AND HWS/R PIPING AS INDICATED ON DRAWINGS, SEE DETAIL 1/H403.
3. NOTE REMOVED PER ADDENDUM 1 — ADD #1
4. PROVIDE ALL MATERIAL AND LABOR TO REMOVE AND RE-INSTALL PIPING ENCLOSURE TO EXISTING UNIT VENTILATORS AND CUT AN OPENING IN EXISTING ENCLOSURE TO ALLOW FOR THE INSTALLATION OF NEW CHILLED WATER PIPING INTO EXISTING PIPING ENCLOSURE.
5. FURNISH AND INSTALL NEW FINNED TUBE RADIATOR/ RECESSED HOT WATER CONVECTOR AND ASSOCIATED HWS/R PIPING AS INDICATED ON DRAWINGS, SEE DETAIL 6/H403.
6. FURNISH AND INSTALL NEW UNIT HEATER W/ 2-WAY VALVE AND ASSOCIATED HWS/R PIPING AS INDICATED ON DRAWINGS, SEE DETAILS, 3/H403.
7. FURNISH AND INSTALL VAV-BOX/ REHEAT COIL W/ 2-WAY VALVE AND ASSOCIATED HWS/R PIPING AS INDICATED ON DRAWINGS. SEE DETAIL 3/H403
8. FURNISH AND INSTALL NEW AIR HANDLING UNIT AHU-2B AND ALL ASSOCIATED PIPING AS INDICATED ON DRAWINGS, SEE DETAILS 5/H400, 4/H402, 5/H402.
9. FURNISH AND INSTALL NEW AIR HANDLING UNIT AHU-2C AND ALL ASSOCIATED PIPING AS INDICATED ON DRAWINGS, SEE DETAILS 6/H400, 4/H402, 5/H402.

— ADD #1

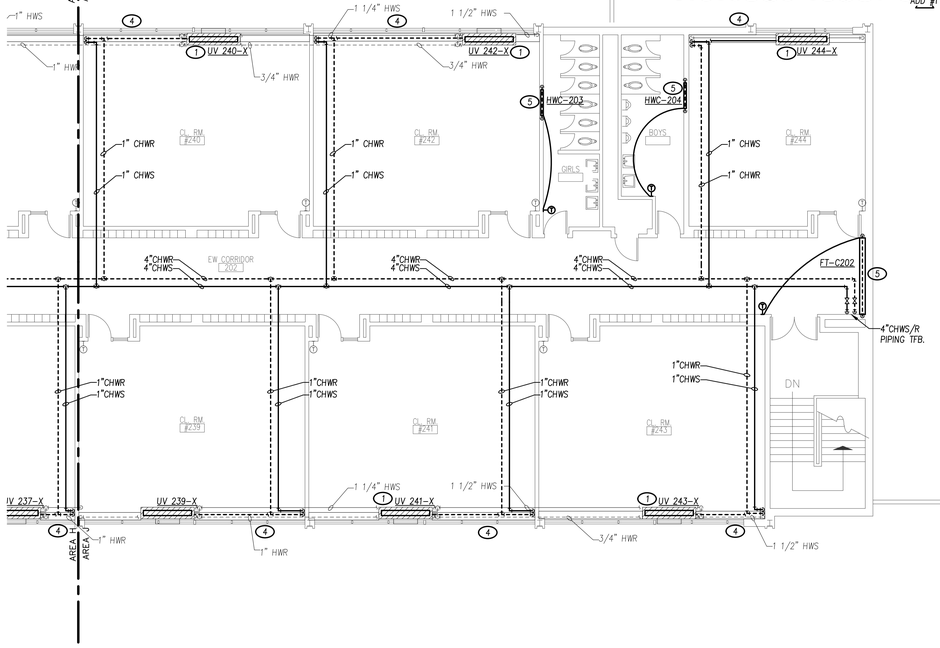

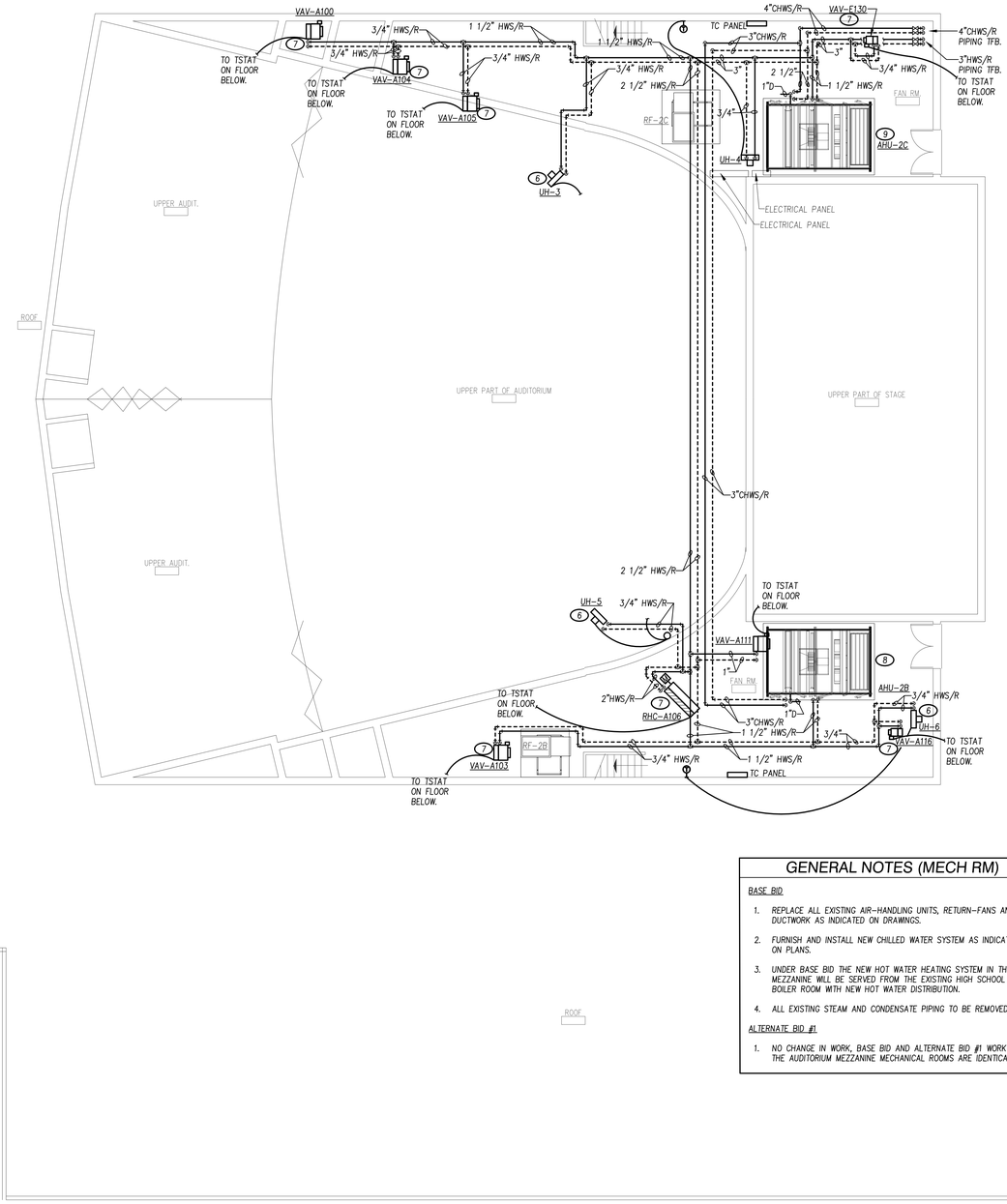

GENERAL NOTES (MECH RM)

BASE BID

1. REPLACE ALL EXISTING AIR-HANDLING UNITS, RETURN-FANS AND DUCTWORK AS INDICATED ON DRAWINGS.
2. FURNISH AND INSTALL NEW CHILLED WATER SYSTEM AS INDICATED ON PLANS.
3. UNDER BASE BID THE NEW HOT WATER HEATING SYSTEM IN THE MEZZANINE WILL BE SERVED FROM THE EXISTING HIGH SCHOOL BOILER ROOM WITH NEW HOT WATER DISTRIBUTION.
4. ALL EXISTING STEAM AND CONDENSATE PIPING TO BE REMOVED.

ALTERNATE BID #1

1. NO CHANGE IN WORK, BASE BID AND ALTERNATE BID #1 WORK IN THE AUDITORIUM MEZZANINE MECHANICAL ROOMS ARE IDENTICAL.

1 ALTERNATE BID #1
SECOND FLOOR PLAN - HEATING NEW WORK - AREA J
SCALE: 1/8" = 1'-0"

NORTH

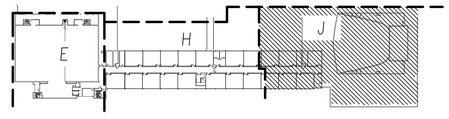

KEY PLAN
SCALE: NOT TO SCALE

NORTH

DATE: 2/21/2022

KEITH Engineering Design
www.keithmep.com
707 SE Jefferson Ave. Suite 100, Peoria, IL 61603
309.692.4500 office
309.214.4063 fax

ROCKFORD PUBLIC SCHOOLS
FEHR GRAHAM ENGINEERING & ENVIRONMENTAL
230 WOODLAWN AVENUE AURORA, ILLINOIS 60506
Saavedra Group Architects
504 N. CHURCH STREET ROCKFORD, ILLINOIS 61103

No.	Date	Revisions
1	3/17/2022	ADDENDUM 1

GUILFORD HIGH SCHOOL
HVAC UPGRADE
ROCKFORD, ILLINOIS

Sheet Title:
SECOND FLOOR PLAN - HEATING
NEW WORK - AREA J
ALTERNATE BID #1

Proj. No.: 2251
Date: 02/21/2022
Drawn: GBW
Approved: RCR
Sheet No.: H12J.A

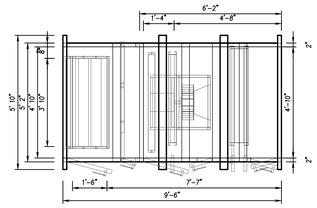

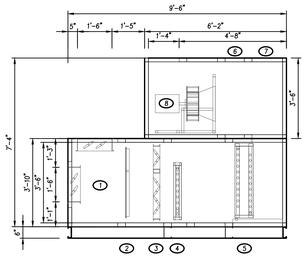

AIR HANDLING UNIT (AHU-1A) KEYED NOTES:

1. MIXING BOX
2. PANEL FILTER
3. FACE AND BYPASS
4. HOT WATER COIL
5. CHILLED WATER COIL
6. ACCESS SECTION
7. ACCESS SECTION
8. SUPPLY FAN

1 AIR HANDLING UNIT PLAN AND ELEVATION DETAIL (AHU-1A)

SCALE: N.T.S.

ADD #1

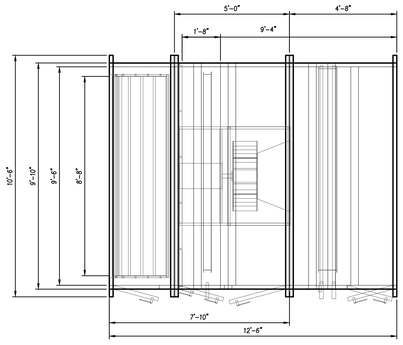

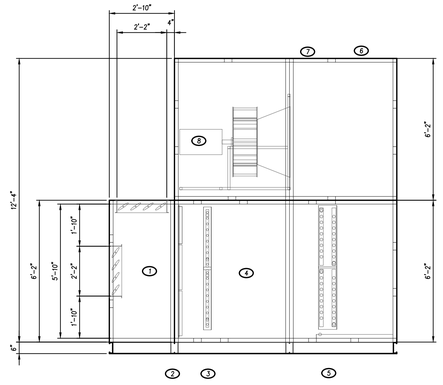

AIR HANDLING UNIT (AHU-1C) KEYED NOTES:

1. MIXING BOX
2. PANEL FILTER
3. HOT WATER COIL
4. ACCESS SECTION
5. CHILLED WATER COIL
6. ACCESS SECTION
7. ACCESS SECTION
8. SUPPLY FAN

2 AIR HANDLING UNIT PLAN AND ELEVATION DETAIL (AHU-1C)

SCALE: N.T.S.

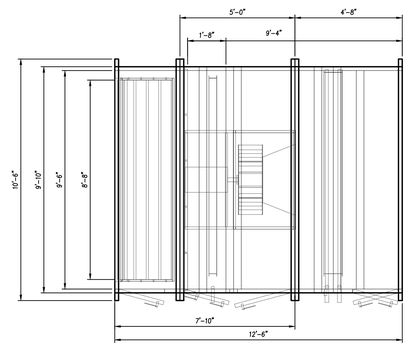

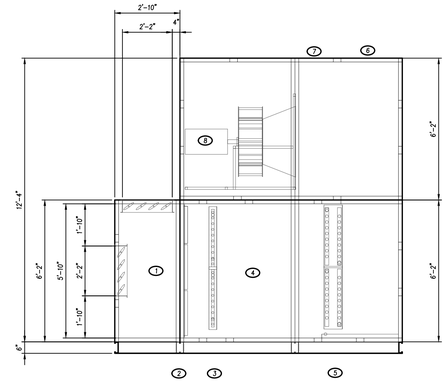

AIR HANDLING UNIT (AHU-1D) KEYED NOTES:

1. MIXING BOX
2. PANEL FILTER
3. HOT WATER COIL
4. ACCESS SECTION
5. CHILLED WATER COIL
6. ACCESS SECTION
7. ACCESS SECTION
8. SUPPLY FAN

3 AIR HANDLING UNIT PLAN AND ELEVATION DETAIL (AHU-1D)

SCALE: N.T.S.

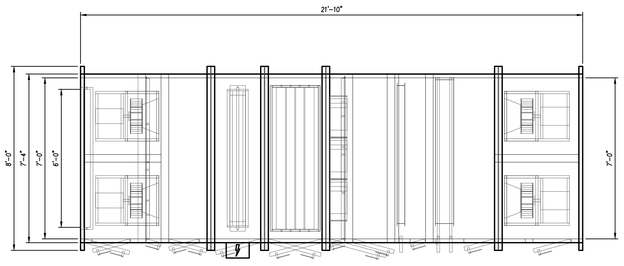

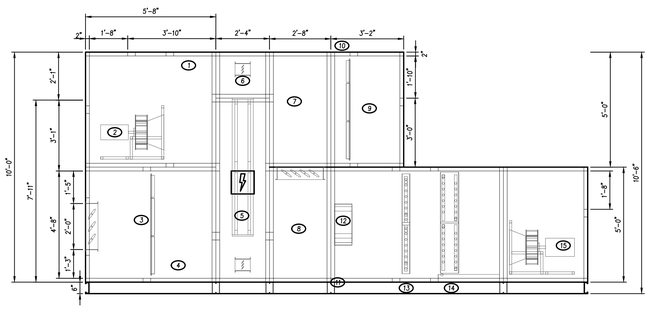

AIR HANDLING UNIT (AHU-1E) KEYED NOTES:

1. ACCESS SECTION
2. RETURN FAN
3. MIXING BOX
4. ACCESS SECTION
5. ENERGY RECOVERY WHEEL
6. BYPASS DAMPER
7. TOP RECIRC SECTION
8. BOTTOM RECIRC SECTION
9. PLENUM
10. PANEL FILTER
11. PANEL FILTER
12. BLENDER
13. HOT WATER COIL
14. CHILLED WATER COIL
15. SUPPLY FAN

4 AIR HANDLING UNIT PLAN AND ELEVATION DETAIL (AHU-1E)

SCALE: N.T.S.

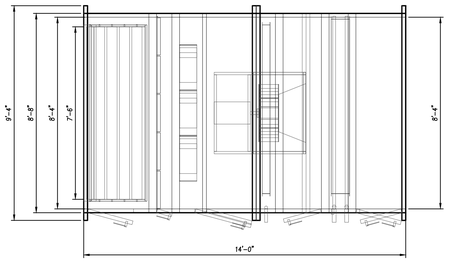

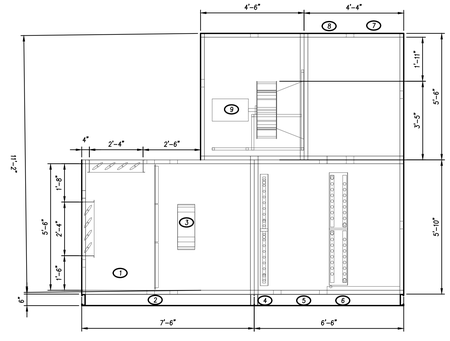

AIR HANDLING UNIT (AHU-2B) KEYED NOTES:

1. MIXING BOX
2. PANEL FILTER
3. BLENDER
4. HOT WATER COIL
5. ACCESS SECTION
6. CHILLED WATER COIL
7. ACCESS SECTION
8. ACCESS SECTION
9. SUPPLY FAN

5 AIR HANDLING UNIT PLAN AND ELEVATION DETAIL (AHU-2B)

SCALE: N.T.S.

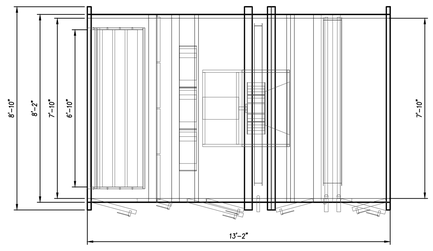

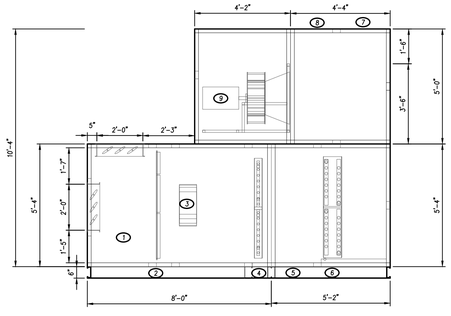

AIR HANDLING UNIT (AHU-2C) KEYED NOTES:

1. MIXING BOX
2. PANEL FILTER
3. BLENDER
4. HOT WATER COIL
5. ACCESS SECTION
6. CHILLED WATER COIL
7. ACCESS SECTION
8. ACCESS SECTION
9. SUPPLY FAN

6 AIR HANDLING UNIT PLAN AND ELEVATION DETAIL (AHU-2C)

SCALE: N.T.S.

KEITH Engineering Design
www.keithmep.com
707 SE Jefferson Ave. Peoria, IL 61603
309 / 688-4000 - office
309 / 214-0063 - fax

ROCKFORD PUBLIC SCHOOLS
FEHR GRAHAM ENGINEERING & ENVIRONMENTAL
230 WOODLAWN AVENUE AURORA, ILLINOIS 60506
Saavedra Group Architects
504 N. CHURCH STREET ROCKFORD, ILLINOIS 61103

DATE: 2/21/2022

No.	Date	Revisions
1	3/17/2022	ADDENDUM 1

GUILFORD HIGH SCHOOL
HVAC UPGRADE
ROCKFORD, ILLINOIS

Sheet Title: HEATING DETAILS

Proj. No.:	2251
Date:	02/21/2022
Drawn:	GBW
Approved:	RCR
Sheet No.:	H400

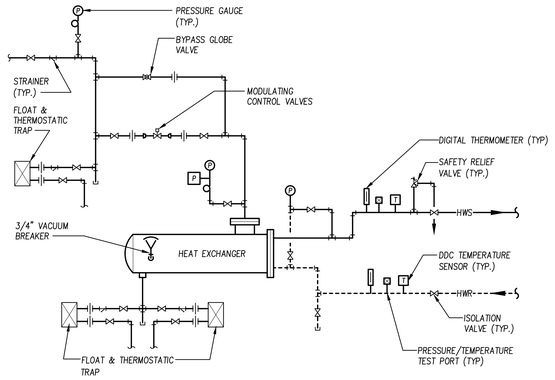

1 STEAM TO HOT WATER HEAT EXCHANGER PIPING DETAIL
SCALE: NOT TO SCALE

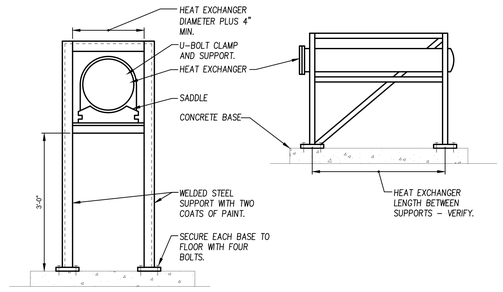

2 HEAT EXCHANGER SUPPORT DETAIL
SCALE: NOT TO SCALE

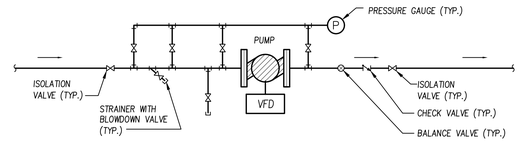

3 INLINE PUMP PIPING DETAIL
SCALE: NOT TO SCALE

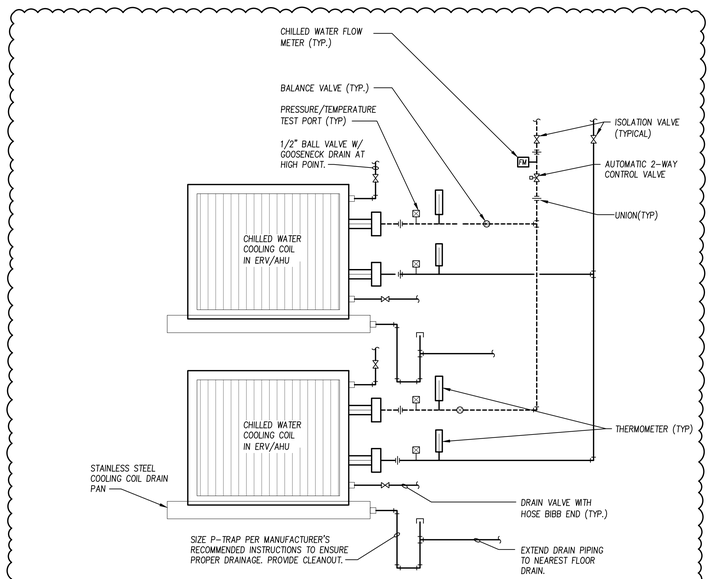

4 STACKED - AHU CHILLED WATER COOLING COIL PIPING DETAIL
SCALE: NOT TO SCALE

ADD #1

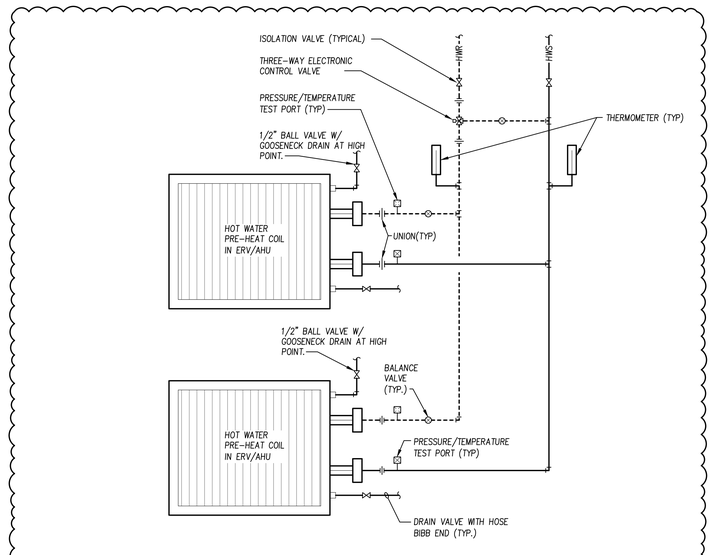

5 STACKED - AHU HOT WATER PRE-HEAT COIL PIPING DETAIL
SCALE: NOT TO SCALE

ADD #1

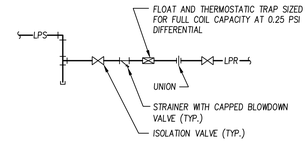

6 END OF STEAM MAIN DRIP TRAP PIPING DETAIL
SCALE: NOT TO SCALE

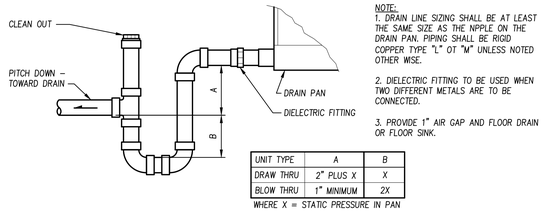

NOTE:
1. DRAIN LINE SIZING SHALL BE AT LEAST THE SAME SIZE AS THE NPPLE ON THE DRAIN PAN. PIPING SHALL BE RIGID COPPER TYPE "L" OT "M" UNLESS NOTED OTHER WISE.
2. DIELECTRIC FITTING TO BE USED WHEN TWO DIFFERENT METALS ARE TO BE CONNECTED.
3. PROVIDE 1" AIR GAP AND FLOOR DRAIN OR FLOOR SINK.

UNIT TYPE	A	B
DRAW THRU	2" PLUS X	X
BLOW THRU	1" MINIMUM	2X

WHERE X = STATIC PRESSURE IN PAN

7 AHU CONDENSATE DRAIN PIPING DETAIL
SCALE: N.T.S.

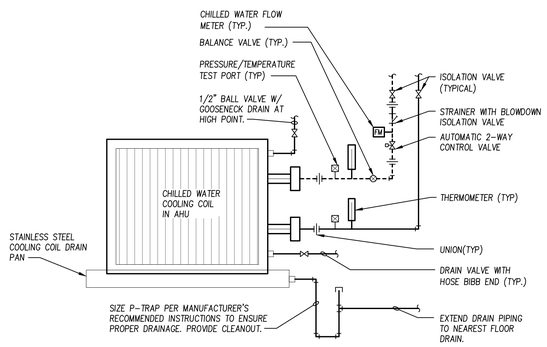

8 SINGLE - AHU CHILLED WATER COIL PIPING DETAIL
SCALE: N.T.S.

ADD #1

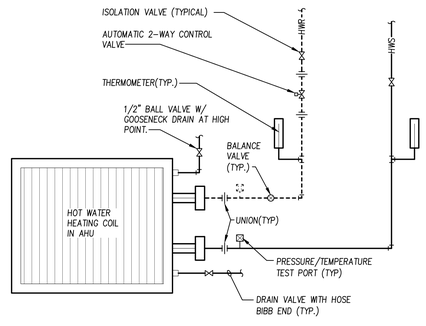

9 SINGLE - AHU HOT WATER COIL PIPING DETAIL
SCALE: NOT TO SCALE

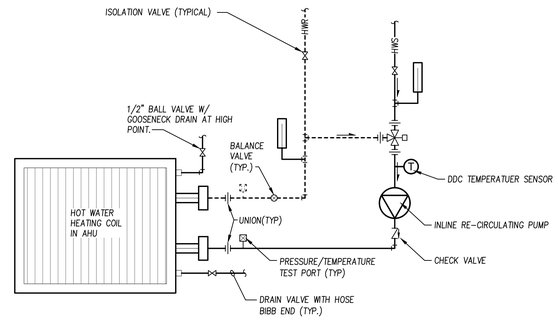

10 SINGLE - AHU HOT WATER COIL (WITH RECIRC PUMP) PIPING DETAIL
SCALE: N.T.S.

REF
052-056761
PROFESSIONAL ENGINEER
STATE OF ILLINOIS
DATE: 2/21/2022

KEITH Engineering Design
www.keithmep.com
309.808.4000 - office
309.214.4063 - fax
707 SE Jefferson Ave
Peoria, IL 61603

ROCKFORD PUBLIC SCHOOLS
FEHR GRAHAM
ENGINEERING & ENVIRONMENTAL
230 WOODLAWN AVENUE
AURORA, ILLINOIS 60506
Saavedra Group Architects
504 N. CHURCH STREET
ROCKFORD, ILLINOIS 61103

No.	Date	Revisions
1	3/17/2022	ADDENDUM 1

GUILFORD HIGH SCHOOL
HVAC UPGRADE
ROCKFORD, ILLINOIS

Sheet Title: HEATING DETAILS

Proj. No.: 2251
Date: 02/21/2022
Drawn: GBW
Approved: RCR
Sheet No.: H402

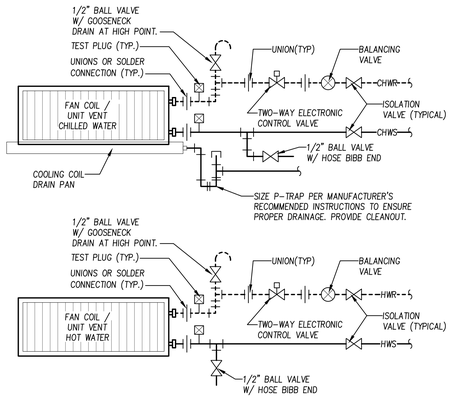

1 UNIT VENTILATOR AND FAN COIL UNIT PIPING DETAIL
SCALE: N.T.S.

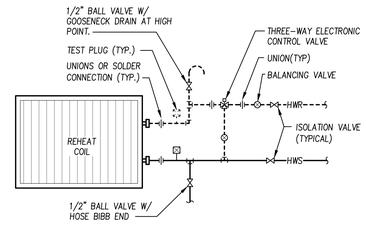

2 3-WAY VALVE
REHEAT COIL PIPING DETAIL
SCALE: NOT TO SCALE

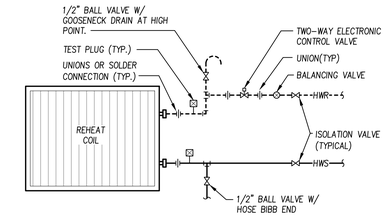

3 2-WAY VALVE
REHEAT COIL PIPING DETAIL
SCALE: NOT TO SCALE

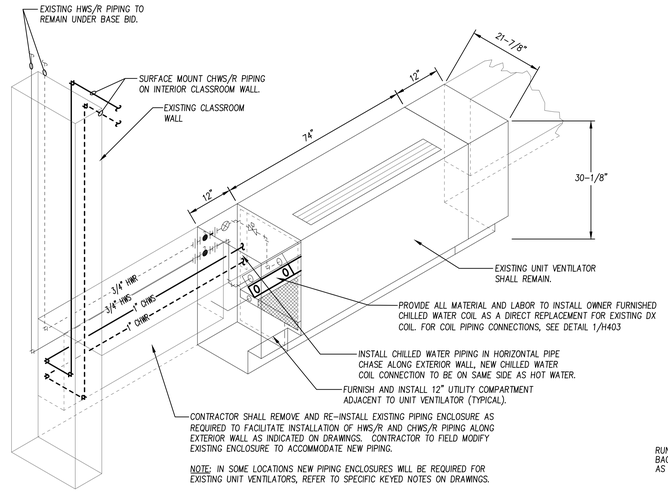

4 CHILLED WATER COIL CONVERSION
EXISTING UNIT VENTILATOR PIPING DETAIL
SCALE: NOT TO SCALE

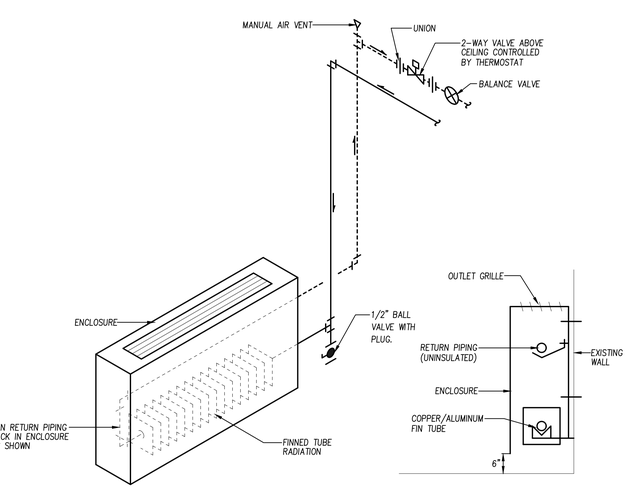

5 FINNED TUBE RADIATION PIPING DETAIL (OVERHEAD PIPING)
SCALE: NOT TO SCALE

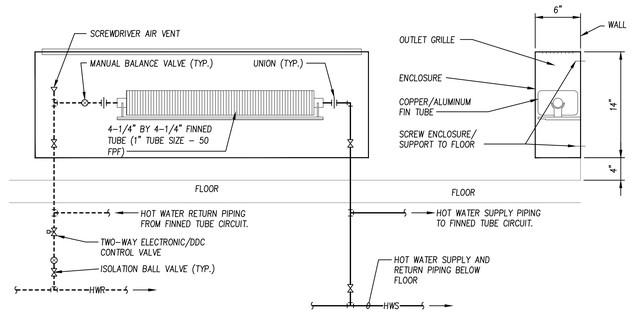

6 FINNED TUBE RADIATION PIPING DETAIL (BELOW FLOOR PIPING)
SCALE: N.T.S.

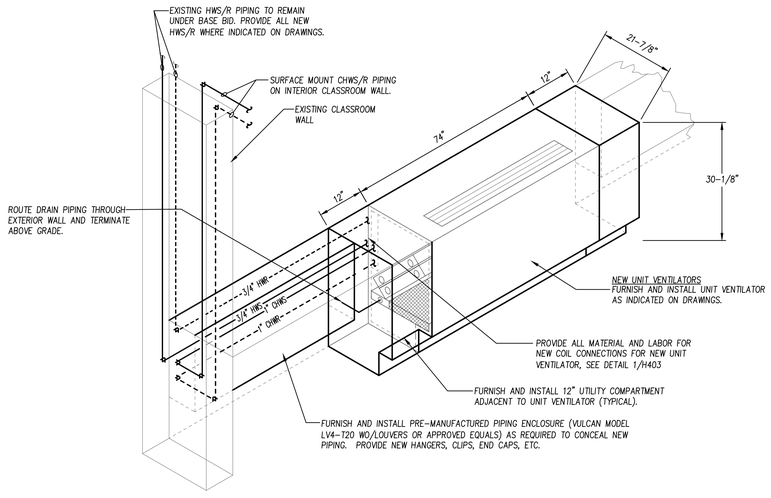

7 NEW UNIT VENTILATOR PIPING DETAIL
SCALE: NOT TO SCALE

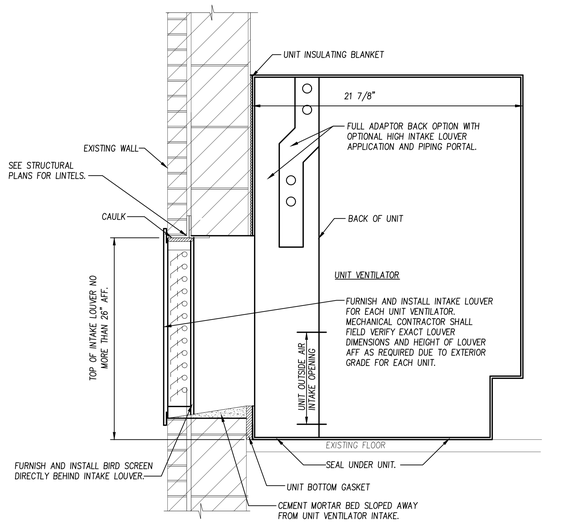

8 UNIT VENTILATOR - OA LOUVER DETAIL
SCALE: NOT TO SCALE

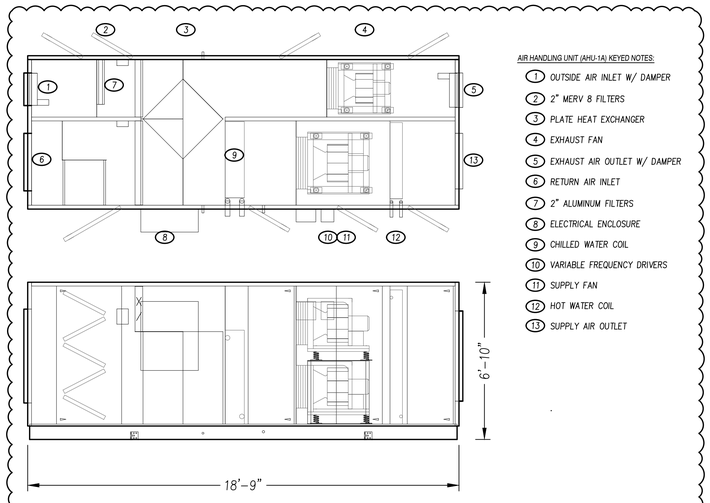

9 POOL DEHUMIDIFIER PLAN AND ELEVATION DETAIL (PDU-1)
SCALE: NOT TO SCALE

ADD #1

DATE: 03/28/2022

KEITH Engineering Design
www.keithmep.com
707 SE Jefferson Ave. Peoria, IL 61603
309.1638.4000 - office
309.214.4063 - fax

ROCKFORD PUBLIC SCHOOLS
FEHR GRAHAM ENGINEERING & ENVIRONMENTAL
230 WOODLAWN AVENUE AURORA, ILLINOIS 60506
Saavedra Group Architects
504 N. CHURCH STREET ROCKFORD, ILLINOIS 61103

No.	Date	Revisions
1	3/17/2022	ADDENDUM 1

GUILFORD HIGH SCHOOL
HVAC UPGRADE
ROCKFORD, ILLINOIS

Sheet Title: HEATING DETAILS

Proj. No.: 2251
Date: 02/21/2022
Drawn: GBW
Approved: RCR
Sheet No.: H403

AIR HANDLING UNIT SCHEDULE

			AHU-1A	AHU-1C	AHU-1D	AHU-1E	AHU-2B	AHU-2C	AHU-3D	AHU-3E
TAG			AHU-1A	AHU-1C	AHU-1D	AHU-1E	AHU-2B	AHU-2C	AHU-3D	AHU-3E
TYPE			MODULAR	MODULAR	MODULAR	MODULAR	MODULAR	MODULAR	MODULAR	MODULAR
LOCATION SERVED			LOCKER ROOMS	SOUTH GYM	SOUTH GYM	CAFETERIA	AUDITORIUM +	AUDITORIUM	INDUSTRIAL SHOPS	INDUSTRIAL SHOPS
MANUFACTURER (BASIS OF DESIGN)			DAIKIN	DAIKIN	DAIKIN	DAIKIN	DAIKIN	DAIKIN	DAIKIN	DAIKIN
ARRANGEMENT			DRAW-THRU	DRAW-THRU	DRAW-THRU	DRAW-THRU	DRAW-THRU	DRAW-THRU	DRAW-THRU	DRAW-THRU
SYSTEM AIRFLOW	DESIGN AIRFLOW (CFM)		5,300	21,000	21,000	10,000	16,600	13,450	5,000	5,000
	CONNECTED AIRFLOW		5,300	21,000	21,000	10,000	16,600	13,450	5,000	5,000
	PERCENT DIVERSITY		–							
	MIN. OUTDOOR AIRFLOW (CFM) / %OA		1600 / 30%	7000 / 30.0%	7000 / 30.0%	4500 / 45%	5000 / 30%	4035 / 30%	1500 / 30%	1500 / 30%
RETURN FAN	FAN	QUANTITY	EXTERNAL RETURN FAN – SEE RETURN FAN SCHEDULE ON VENT DRAWINGS	EXTERNAL RETURN FAN – SEE RETURN FAN SCHEDULE ON VENT DRAWINGS	EXTERNAL RETURN FAN – SEE RETURN FAN SCHEDULE ON VENT DRAWINGS	1	EXTERNAL RETURN FAN – SEE RETURN FAN SCHEDULE ON VENT DRAWINGS	EXTERNAL RETURN FAN – SEE RETURN FAN SCHEDULE ON VENT DRAWINGS	NOT APPLICABLE	NOT APPLICABLE
		FAN TYPE / WHEEL DIAM (IN)				PLENUM / 15.75				
		AIRFLOW (CFM)				4,500				
		FAN SPEED (RPM)				2,430				
		E.S.P. (IN WG)				0.50				
		T.S.P. (IN WG)				1.53				
	MOTOR	QUANTITY				1				
		HORSEPOWER (HP)				5.00				
		BRAKE HORSEPOWER (HP)				2.32				
		SPEED (RPM)				1,750				
		DRIVE				DIRECT				
		VOLTS / PHASE / HERTZ				460 / 3 / 60				
SUPPLY FAN	FAN	QUANTITY	1	1	1	2	1	1	1	1
		FAN TYPE / WHEEL DIAM (IN)	PLENUM / 18.25	PLENUM / 36.5	PLENUM / 36.5	PLENUM / 15.75	PLENUM / 30	PLENUM / 27	PLENUM / 18.25	PLENUM / 18.25
		AIRFLOW (CFM)	5,300	21,000	21,000	10,000	16,600	13,450	5,000	5,000
		FAN SPEED (RPM)	2,238	1,085	1,085	3,096	1,498	1,644	2,238	2,238
		E.S.P. (IN WG)	2.00	2.00	2.00	2.00	2.00	2.00	1.00	1.00
		T.S.P. (IN WG)	3.63	3.75	3.75	4.30	4.29	4.23	2.63	2.63
	MOTOR	QUANTITY	1	1	1	2	1	1.00	1	1
		HORSEPOWER (HP)	7.50	25.00	25.00	7.50	20.00	15.00	5.00	5.00
		BRAKE HORSEPOWER (HP)	4.73	18.58	18.58	5.61	16.92	13.45	2.73	2.73
		SPEED (RPM)	1,750	1,750	1,750	1,750	1,750	1,750	1,750	1,750
		DRIVE	DIRECT	DIRECT	DIRECT	DIRECT	DIRECT	DIRECT	DIRECT	DIRECT
		VOLTS / PHASE / HERTZ	460 / 3 / 60	460 / 3 / 60	460 / 3 / 60	460 / 3 / 60	460 / 3 / 60	460 / 3 / 60	460 / 3 / 60	460 / 3 / 60
PRE-HEAT – HEATING COIL	TYPE		HOT WATER	HOT WATER	HOT WATER	HOT WATER	HOT WATER	HOT WATER	HOT WATER	HOT WATER
	COIL	MIN. FACE AREA (SQ FT)	11.50	42.50	42.50	19.83	33.00	27.33	11.50	11.50
		MAX. FACE VELOCITY (FPM)	461	540	540	504	503	492	461	461
		# OF COILS / ROWS PER COIL	1 / 1	1 / 1	1 / 1	1 / 1	2 / 1	2 / 1	1 / 1	1 / 1
	CAPACITY	NET TOTAL (BTUH)	117,723	467,953	467,953	120,028	363,387	295,449	117,723	117,723
	FLUID	TYPE	WATER	WATER	WATER	WATER	WATER	WATER	WATER	WATER
		E.W.T. / L.W.T. (°F)	160 / 120	160 / 120	160 / 120	160 / 120	160 / 120	160 / 120	160 / 120	160 / 120
		FLOW RATE (GPM)	5.8	23.0	23.0	19.8	18.2	14.7	5.8	5.8
		MAX. P.D. (FT WG)	0.5	3.9	3.9	0.5	2.1	2.1	0.5	0.5
	AIR	UNIT E.A.T. DB (°F)	45	45	45	55	45	45	45	45
		UNIT L.A.T. DB (°F)	65.3	65.4	65.4	66	65	65.1	65.3	65.3
		MAX. A.P.D. (IN WG)	0.16	0.16	0.16	0.12	0.17	0.16	0.16	0.16
COOLING COIL	TYPE		CHILLED WATER	CHILLED WATER	CHILLED WATER	CHILLED WATER	CHILLED WATER	CHILLED WATER	CHILLED WATER	CHILLED WATER
	COIL	MIN. FACE AREA (SQ FT)	12.25	43.75	43.75	20.71	34.12	28.33	12.25	12.25
		MAX. FACE VELOCITY (FPM)	433	480	480	483	486	475	433	433
		# OF COILS / ROWS PER COIL	1 / 6	2 / 6	2 / 6	1 / 6	2 / 6	2 / 6	1 / 6	1 / 6
	CAPACITY	NET TOTAL (BTUH)	215,042	852,896	852,896	330,108	677,227	546,599	215,042	215,042
		NET SENSIBLE (BTUH)	149,933	591,116	591,116	252,364	470,229	380,278	149,933	149,933
	FLUID	TYPE	30% PROPYLENE GLYCOL	30% PROPYLENE GLYCOL	30% PROPYLENE GLYCOL	30% PROPYLENE GLYCOL	30% PROPYLENE GLYCOL	30% PROPYLENE GLYCOL	30% PROPYLENE GLYCOL	30% PROPYLENE GLYCOL
		E.W.T. / L.W.T. (°F)	43 / 59	43 / 59	43 / 59	43 / 59	43 / 59	43 / 59	43 / 59	43 / 59
		FLOW RATE (GPM)	26.5	105.1	105.1	40.5	83.1	67.3	26.5	26.5
		FLUID P.D. (FT WG)	7.2	16.5	16.5	12.5	11.5	9.1	7.2	7.2
	AIR	UNIT E.A.T. DB / WB (°F)	80.0 / 67.0	80.0 / 67.0	80.0 / 67.0	77.6 / 64.8	80.0 / 67.0	80 / 67	80.0 / 67.0	80.0 / 67.0
		UNIT L.A.T. DB / WB (°F)	54.1 / 53.8	54.3 / 53.8	54.3 / 53.8	54.5 / 53.8	54.1 / 53.7	54.1 / 53.8	54.1 / 53.8	54.1 / 53.8
		MAX. A.P.D. (IN WG)	0.64"	0.71	0.71	0.62	0.77	0.74	0.64"	0.64"
FILTERS	PRE	THICKNESS & TYPE	4" PLEATED	4" PLEATED	4" PLEATED	4" PLEATED	4" PLEATED	4" PLEATED	4" PLEATED	4" PLEATED
		EFFICIENCY	MERV 13 / >80% EFF	MERV 13 / >80% EFF	MERV 13 / >80% EFF	MERV 13 / >80% EFF	MERV 13 / >80% EFF	MERV 13 / >80% EFF	MERV 13 / >80% EFF	MERV 13 / >80% EFF
		MIN. FACE AREA (SQ FT)	13.1	52.0	7.0	26.7	42.2	35.2	13.1	13.1
		MAX. FACE VELOCITY (FPM)	403	404	460	338	393	382	403	403
		DESIGN A.P.D. (DIRTY) (IN WG)	0.59	0.59	0.60	0.59	0.58	0.58	0.59	0.59
	FINAL	THICKNESS & TYPE	NA	NA	NA	NA	NA	NA	NA	NA
		EFFICIENCY								
		MIN. FACE AREA (SQ FT)								
		MAX. FACE VELOCITY (FPM)								
		DESIGN A.P.D. (DIRTY) (IN WG)								
ENERGY RECOVERY			NA	NA	NA	SEE ENERGY RECOVERY WHEEL SCHEDULE	NA	NA	NA	NA
MAX. UNIT DIMENSIONS	LENGTH (IN)		102"	150"	222"	262"	168"	200"	98"	352"
	WIDTH (IN)		62"	118"	48"	84"	104"	48"	56"	116"
	HEIGHT (IN)		46"	74"	42"	72"	70"	86"	54"	74"
	WEIGHT (LBS)		2,462	–	–	–	–	–	–	–

NOTES: 1) COORDINATE DUCT SMOKE DETECTOR LOCATION WITH ELECTRICAL CONTRACTOR PRIOR TO DUCT FABRICATION.

POOL DEHUMIDIFICATION UNIT SCHEDULE

DRAWING TAG	PDU-1
AREA SERVED	NATATORIUM
UNIT LOCATION	MECHANIAL RM
UNIT TYPE	HEATING ONLY
MANUFACTURER	INNOVENT
MODEL NUMBER	NDHU-SS-PL-11200-CW-HW-208
ROOM CONDITIONS	
SPACE TEMP (DEG F)	82 F
RELATIVE HUMIDITY (%)	60% RH
POOL WATER TEMP (DEG F)	80 F
UNIT ELECTRICAL DATA (SINGLE POINT POWER)	
POWER (VOLT/PHASE/HZ)	460 V / 3PH / 60 HZ
MCA	31.6
MOP	50
DISCONNECT	FACTORY
CHILLED WATER COIL	
AIRFLOW	PROVIDE SPACE FOR FUTURE CHILLED WATER COIL
EVAP TOTAL CAPACITY (MBH)	
EVAP SENSIBLE CAPACITY (MBH)	
EAT (DB / WB)	
LAT (DB / WB)	
FLOW RATE (GPM)	
GLYCOL	
EWT / LWT	
REHEAT CONDENSER	
REHEAT CAPACITY (MBH)	NA
PLATE HEAT EXCHANGER	
COOLING MODE	5600
PURGE HEATING	5600
HEATING	2800
SUPPLY FAN	
TYPE	PLENUM SWSI
AIRFLOW (CFM)	11,200
QUANTITY	2
AIRFLOW PER FAN	5,600
EXTERNAL S.P., IN WG	2.0"
TOTAL S.P., IN WG	4.73"
FAN BRAKE HORSEPOWER	5.9"
FAN SPEED (RPM)	2092
MOTOR HORSEPOWER	7.5 HP PER FAN
FAN MOTOR EFFICIENCY	PREMIUM
DRIVE TYPE	DIRECT
MOTOR SPEED (RPM)	1,800
FLA	35.5
OUTSIDE AIR	
MIN CFM	5,600
RETURN AIR	
AIRFLOW (CFM)	12,320
AUX HEAT - HOT WATER COIL	
LOCATION	IN UNIT
EWT, DEG F	160 F
EAT, DEG F	35
FLOW RATE, GPM	72
CAPACITY (MBH)	1,440

NOTES:

1. CORROSION PROTECTION SHALL BE PROVIDED ON ALL UNIT CASING PANELS AND FRAME MEMBERS WITH AN ELECTROSTATICALLY APPLIED POLYESTER POWDER COATING.
2. UNIT SHALL BE PROVIDED WITH MICROPROSESSER CONTROLLER WITH BACNET INTERFACE
3. PROVIDE FACTORY MOUNTED DISCONNECT SWITCH.

ROOF TOP UNIT SCHEDULE

MARK	DESIGN BASIS		UNIT DESCRIPTION	AREA SERVED	DESIGN AIRFLOW (CFM)	EXT. STATIC (IN. W.C.)	COOLING PERFORMANCE – DX									OUTDOOR AIR (%)	HEATING PERFORMANCE					ELECTRIAL DATA			REMARKS
	MAKE	MODEL / SERIES					REFRIG. TYPE	EER	IEER	TOTAL CAPACITY (BTUH)	SENSIBLE CAPACITY (BTUH)	ENTERING AIR TEMPERATURE (DB)	ENTERING AIR TEMPERATURE (WB)	LEAVING AIR TEMPERATURE (DB)	LEAVING AIR TEMPERATURE (WB)		HEATING CAPACITY INPUT (MBH)	HEATING CAPACITY OUTPUT (MBH)	TYPE	EAT (F)	LAT (F)	MCA (AMPS)	VOLTS	PHASE	
RTU-1H	DAIKIN (OR EQUAL)	REBEL (OR EQUAL)	PACKAGE ROOFTOP AIR HANDLER	OFFICE ADMIN	6,000	2	R-410A	11.1	18.0	173,947	155,359	78.0	64.0	54.3	54.2	25%	NONE – COOLING ONLY					79.2	208	3	
RTU-1E	DAIKIN (OR EQUAL)	REBEL (OR EQUAL)	PACKAGE ROOFTOP AIR HANDLER	GYM LOBBY	4,000	1.5	R-410A	12.4	19.3	18,941	103,175	78.0	64.0	54.4	54.0	25%	NONE – COOLING ONLY					29.6	460	3	

NOTES:

1. PROVIDE FACTORFY MOUNTED DISCONNECT SWITCH.

ADD #1

ENERGY RECOVERY WHEEL SCHEDULE

MARK	DESIGN BASIS		LOCATION / SERVICE	DESSICANT TYPE	WHEEL EFFICIENCY (SUMMER / WINTER)	SUMMER PERFORMANCE									WINTER PERFORMANCE									ELECTRIAL DATA			REMARKS
	MAKE	MODEL / SERIES				OUTSIDE AIR DB (F)	OUTSIDE AIR WB (F)	RETURN AIR DB (F)	RETURN AIR WB (F)	SUPPLY AIR DB (F)	SUPPLY AIR WB (F)	EXHAUST AIR DB (F)	EXHAUST AIR WB (F)	A.P.D. IN. W.C. (SUPPLY / RETURN)	OUTSIDE AIR DB (F)	OUTSIDE AIR WB (F)	RETURN AIR DB (F)	RETURN AIR WB (F)	SUPPLY AIR DB (F)	SUPPLY AIR WB (F)	EXHAUST AIR DB (F)	EXHAUST AIR WB (F)	A.P.D. IN. W.C. (SUPPLY / RETURN)	MOTOR (HP)	VOLTS	PHASE	
ERW-1E	DAIKIN (AHU MANUFACTURE)	ECW 424	MECH. PENTHOUSE / AHU-1E	SYNTHETIC FIBER 4 ANGSTROM	82.64 % / 86.6%	95.0	78.0	75.0	62.0	80.7	67.4	91.0	75.0	0.42/ 0.36	-10.0	-11.0	70.0	50.0	45.6	35.7	3.6	3.0	.42 / .36	1	120	1	NOTE: 1 THOUGH 6

NOTES:

1. ALL ELECTRICAL COMPONENTS SHALL BE PRE-WIRED FOR A SINGLE POINT POWER CONNECTION
2. ALL FAN MOTORS SHALL BE PREMIUM EFFICIENCY
3. PROVIDE MOTORIZED LOW-LEAKAGE DAMPERS AT INTAKE AND DISCHARGE FROM UNIT.
4. PROVIDE DOUBLE WALL CONSTRUCTION WITH 1" INSULATION
5. PROVIDE ERV REMOTE PANEL
6. SEE SPECIFICATIONS FOR ADDITIONAL REQUIREMENTS

LICENSED PROFESSIONAL ENGINEER RYAN C. REEF 062-056761 EXPIRES: 30NOV23 STATE OF ILLINOIS
DATE: 2/21/2022

KEITH Engineering Design
www.kedmep.com
707 NE Jefferson Ave Peoria, IL : 61603
309 / 938-4005 : office
309 / 214-0063 : fax

ROCKFORD PUBLIC SCHOOLS

FEHR GRAHAM ENGINEERING & ENVIRONMENTAL
230 WOODLAWN AVENUE AURORA, ILLINOIS 60506

Saavedra Group Architects
504 N CHURCH STREET ROCKFORD, ILLINOIS 61103

Revisions

No.	Date	
1	3/17/2022	ADDENDUM 1

GUILFORD HIGH SCHOOL
HVAC UPGRADE
ROCKFORD, ILLINOIS

Sheet Title: HEATING SCHEDULES

Proj. No.: 2251
Date: 02/21/2022
Drawn: GBW
Approved: RCR
Sheet No.: H500

EXISTING UNIT VENTILATOR SCHEDULE (COOLING COIL REPLACMENT)

MARK	DESIGN BASIS MAKE	DESIGN BASIS MODEL / SIZE	DESCRIPTION	UNIT DIMENSIONS LENGTH	UNIT DIMENSIONS HEIGHT	UNIT DIMENSIONS DEPTH	NOMINAL AIRFLOW CFM	OUTSIDE AIR CFM	UNT FAN SPEED	FLUID TYPE	COILS ROWS	COOLING COIL EAT (DB)	COOLING COIL EAT (WB)	COOLING COIL LAT (DB)	COOLING COIL LAT (WB)	COOLING COIL EWT (F)	COOLING COIL LWT (F)	COOLING COIL TOTAL CAP. BTUH	COOLING COIL SENSIBLE CAP. BTUH	COOLING COIL FLOW GPM	COOLING COIL WATER PD	HEATING COIL EAT (F)	HEATING COIL LAT (F)	HEATING COIL EWT (F)	HEATING COIL LWT (F)	HEATING COIL TOTAL CAP. BTUH	HEATING COIL FLOW GPM	HEATING COIL WATER PD	MOTOR HP	MOTOR VOLTS	MOTOR PHASE	REMARKS
UV-192	MCQUAY	UAVS6S15	VERTICAL UNIT VENTILATOR	98"	30"	22"	1500	450	N/A	WATER	4	80.0	67.0	58	55	43.0	57.0	50,651	33,751	7.24	2.98	47.6	130.7	200	142	130,200	4.50	3.31	1/4	120	1	
UV-191	MCQUAY	UAVS6S15	VERTICAL UNIT VENTILATOR	98"	30"	22"	1500	450	N/A	WATER	4	80.0	67.0	58	55	43.0	57.0	50,651	33,751	7.24	2.98	47.6	130.7	200	142	130,200	4.50	3.31	1/4	120	1	
UV-188	MCQUAY	UAVS6S13	VERTICAL UNIT VENTILATOR	86"	30"	22"	1250	350	N/A	WATER	4	80.0	67.0	59.5	56.4	43.0	57.0	39,243	26,459	5.61	2.25	47.6	116.6	200	148	90,800	3.50	1.80	1/4	120	1	
UV-187	MCQUAY	UAVS6S13	VERTICAL UNIT VENTILATOR	86"	30"	22"	1250	350	N/A	WATER	4	80.0	67.0	59.5	56.4	43.0	57.0	39,243	26,459	5.61	2.25	47.6	116.6	200	148	90,800	3.50	1.80	1/4	120	1	
UV-185	MCQUAY	UAVS6S13	VERTICAL UNIT VENTILATOR	86"	30"	22"	1250	350	N/A	WATER	4	80.0	67.0	59.5	56.4	43.0	57.0	39,243	26,459	5.61	2.25	47.6	116.6	200	148	90,800	3.50	1.80	1/4	120	1	
UV-184	MCQUAY	UAVS6S13	VERTICAL UNIT VENTILATOR	86"	30"	22"	1250	350	N/A	WATER	4	80.0	67.0	59.5	56.4	43.0	57.0	39,243	26,459	5.61	2.25	47.6	116.6	200	148	90,800	3.50	1.80	1/4	120	1	
UV-190	MCQUAY	UAVS6S15	VERTICAL UNIT VENTILATOR	98"	30"	22"	1500	450	N/A	WATER	4	80.0	67.0	58	55	43.0	57.0	50,651	33,751	7.24	2.98	47.6	130.7	200	142	130,200	4.50	3.31	1/4	120	1	
UV-189	MCQUAY	UAVS6S15	VERTICAL UNIT VENTILATOR	98"	30"	22"	1500	450	N/A	WATER	4	80.0	67.0	58	55	43.0	57.0	50,651	33,751	7.24	2.98	47.6	130.7	200	142	130,200	4.50	3.31	1/4	120	1	
UV-186	MCQUAY	UAVS6S15	VERTICAL UNIT VENTILATOR	98"	30"	22"	1500	450	N/A	WATER	4	80.0	67.0	58	55	43.0	57.0	50,651	33,751	7.24	2.98	47.6	130.7	200	142	130,200	4.50	3.31	1/4	120	1	
UV-183P	MCQUAY	UAVS6S07	VERTICAL UNIT VENTILATOR	62"	30"	22"	750	200	N/A	WATER	4	80.0	67.0	61.9	57.4	43.0	57.0	23,001	14,971	3.29	1.97	47.6	118.8	200	154	57,800	2.50	1.90	1/4	120	1	
UV-148A	MCQUAY	UAVS6S15	VERTICAL UNIT VENTILATOR	98"	30"	22"	1500	450	N/A	WATER	4	80.0	67.0	58	55	43.0	57.0	50,651	33,751	7.24	2.98	47.6	130.7	200	142	130,200	4.50	3.31	1/4	120	1	
UV-148B	MCQUAY	UAVS6S15	VERTICAL UNIT VENTILATOR	98"	30"	22"	1500	450	N/A	WATER	4	80.0	67.0	58	55	43.0	57.0	50,651	33,751	7.24	2.98	47.6	130.7	200	142	130,200	4.50	3.31	1/4	120	1	
UV-139	MCQUAY	UAVS6S13	VERTICAL UNIT VENTILATOR	86"	30"	22"	1250	350	N/A	WATER	4	80.0	67.0	59.5	56.4	43.0	57.0	39,243	26,459	5.61	2.25	47.6	116.6	200	148	90,800	3.50	1.80	1/4	120	1	
UV-141	MCQUAY	UAVS6S13	VERTICAL UNIT VENTILATOR	86"	30"	22"	1250	350	N/A	WATER	4	80.0	67.0	59.5	56.4	43.0	57.0	39,243	26,459	5.61	2.25	47.6	116.6	200	148	90,800	3.50	1.80	1/4	120	1	
UV-143	MCQUAY	UAVS6S13	VERTICAL UNIT VENTILATOR	86"	30"	22"	1250	350	N/A	WATER	4	80.0	67.0	59.5	56.4	43.0	57.0	39,243	26,459	5.61	2.25	47.6	116.6	200	148	90,800	3.50	1.80	1/4	120	1	
UV-145	MCQUAY	UAVS6S13	VERTICAL UNIT VENTILATOR	86"	30"	22"	1250	350	N/A	WATER	4	80.0	67.0	59.5	56.4	43.0	57.0	39,243	26,459	5.61	2.25	47.6	116.6	200	148	90,800	3.50	1.80	1/4	120	1	
UV-182	MCQUAY	UAVV6S10	VERTICAL UNIT VENTILATOR	74"	30"	22"	1,000	300	N/A	WATER	4	80.0	67.0	59.2	56	43.0	57.0	32,602	21,675	4.66	2.28	47.6	112.5	200	145	69,000	2.50	1.30	1/4	120	1	
UV-181	MCQUAY	UAVS6S13	VERTICAL UNIT VENTILATOR	86"	30"	22"	1250	350	N/A	WATER	4	80.0	67.0	59.5	56.4	43.0	57.0	39,243	26,459	5.61	2.25	47.6	116.6	200	148	90,800	3.50	1.80	1/4	120	1	
UV-180	MCQUAY	UAVS6S13	VERTICAL UNIT VENTILATOR	86"	30"	22"	1250	350	N/A	WATER	4	80.0	67.0	59.5	56.4	43.0	57.0	39,243	26,459	5.61	2.25	47.6	116.6	200	148	90,800	3.50	1.80	1/4	120	1	
UV-177	MCQUAY	UAVS6S13	VERTICAL UNIT VENTILATOR	86"	30"	22"	1250	350	N/A	WATER	4	80.0	67.0	59.5	56.4	43.0	57.0	39,243	26,459	5.61	2.25	47.6	116.6	200	148	90,800	3.50	1.80	1/4	120	1	
UV-175	MCQUAY	UAVS6S13	VERTICAL UNIT VENTILATOR	86"	30"	22"	1250	350	N/A	WATER	4	80.0	67.0	59.5	56.4	43.0	57.0	39,243	26,459	5.61	2.25	47.6	116.6	200	148	90,800	3.50	1.80	1/4	120	1	
UV-174	MCQUAY	UAVS6S13	VERTICAL UNIT VENTILATOR	86"	30"	22"	1250	350	N/A	WATER	4	80.0	67.0	59.5	56.4	43.0	57.0	39,243	26,459	5.61	2.25	47.6	116.6	200	148	90,800	3.50	1.80	1/4	120	1	
UV-179	MCQUAY	UAVS6S15	VERTICAL UNIT VENTILATOR	98"	30"	22"	1500	450	N/A	WATER	4	80.0	67.0	58	55	43.0	57.0	50,651	33,751	7.24	2.98	47.6	130.7	200	142	130,200	4.50	3.31	1/4	120	1	
UV-178	MCQUAY	UAVS6S13	VERTICAL UNIT VENTILATOR	86"	30"	22"	1250	350	N/A	WATER	4	80.0	67.0	59.5	56.4	43.0	57.0	39,243	26,459	5.61	2.25	47.6	116.6	200	148	90,800	3.50	1.80	1/4	120	1	
UV-176	MCQUAY	UAVS6S13	VERTICAL UNIT VENTILATOR	86"	30"	22"	1250	350	N/A	WATER	4	80.0	67.0	59.5	56.4	43.0	57.0	39,243	26,459	5.61	2.25	47.6	116.6	200	148	90,800	3.50	1.80	1/4	120	1	
UV-183CL	MCQUAY	UAVS6S15	VERTICAL UNIT VENTILATOR	98"	30"	22"	1500	450	N/A	WATER	4	80.0	67.0	58	55	43.0	57.0	50,651	33,751	7.24	2.98	47.6	130.7	200	142	130,200	4.50	3.31	1/4	120	1	
UV-146	MCQUAY	UAVS6S15	VERTICAL UNIT VENTILATOR	98"	30"	22"	1500	450	N/A	WATER	4	80.0	67.0	58	55	43.0	57.0	50,651	33,751	7.24	2.98	47.6	130.7	200	142	130,200	4.50	3.31	1/4	120	1	
UV-151	MCQUAY	UAVS6S15	VERTICAL UNIT VENTILATOR	98"	30"	22"	1500	450	N/A	WATER	4	80.0	67.0	58	55	43.0	57.0	50,651	33,751	7.24	2.98	47.6	130.7	200	142	130,200	4.50	3.31	1/4	120	1	
UV-155	MCQUAY	UAVS6S13	VERTICAL UNIT VENTILATOR	86"	30"	22"	1250	350	N/A	WATER	4	80.0	67.0	59.5	56.4	43.0	57.0	39,243	26,459	5.61	2.25	47.6	116.6	200	148	90,800	3.50	1.80	1/4	120	1	
UV-157	MCQUAY	UAVS6S13	VERTICAL UNIT VENTILATOR	86"	30"	22"	1250	350	N/A	WATER	4	80.0	67.0	59.5	56.4	43.0	57.0	39,243	26,459	5.61	2.25	47.6	116.6	200	148	90,800	3.50	1.80	1/4	120	1	
UV-140	MCQUAY	UAVV6S10	VERTICAL UNIT VENTILATOR	74"	30"	22"	1,000	300	N/A	WATER	4	80.0	67.0	59.2	56	43.0	57.0	32,602	21,675	4.66	2.28	47.6	112.5	200	145	69,000	2.50	1.30	1/4	120	1	
UV-142	MCQUAY	UAVS6S13	VERTICAL UNIT VENTILATOR	86"	30"	22"	1250	350	N/A	WATER	4	80.0	67.0	59.5	56.4	43.0	57.0	39,243	26,459	5.61	2.25	47.6	116.6	200	148	90,800	3.50	1.80	1/4	120	1	
UV-144A	MCQUAY	UAVV6S10	VERTICAL UNIT VENTILATOR	74"	30"	22"	1,000	300	N/A	WATER	4	80.0	67.0	59.2	56	43.0	57.0	32,602	21,675	4.66	2.28	47.6	112.5	200	145	69,000	2.50	1.30	1/4	120	1	
UV-144B	MCQUAY	UAVV6S10	VERTICAL UNIT VENTILATOR	74"	30"	22"	1,000	300	N/A	WATER	4	80.0	67.0	59.2	56	43.0	57.0	32,602	21,675	4.66	2.28	47.6	112.5	200	145	69,000	2.50	1.30	1/4	120	1	
UV-134	MCQUAY	UAVS6S15	VERTICAL UNIT VENTILATOR	98"	30"	22"	1500	450	N/A	WATER	4	80.0	67.0	58	55	43.0	57.0	50,651	33,751	7.24	2.98	47.6	130.7	200	142	130,200	4.50	3.31	1/4	120	1	
UV-133	MCQUAY	UAVS6S15	VERTICAL UNIT VENTILATOR	98"	30"	22"	1500	450	N/A	WATER	4	80.0	67.0	58	55	43.0	57.0	50,651	33,751	7.24	2.98	47.6	130.7	200	142	130,200	4.50	3.31	1/4	120	1	
UV-131	MCQUAY	UAVS6S15	VERTICAL UNIT VENTILATOR	98"	30"	22"	1500	450	N/A	WATER	4	80.0	67.0	58	55	43.0	57.0	50,651	33,751	7.24	2.98	47.6	130.7	200	142	130,200	4.50	3.31	1/4	120	1	
UV-119	MCQUAY	UAVS6S15	VERTICAL UNIT VENTILATOR	98"	30"	22"	1500	450	N/A	WATER	4	80.0	67.0	58	55	43.0	57.0	50,651	33,751	7.24	2.98	47.6	130.7	200	142	130,200	4.50	3.31	1/4	120	1	
UV-117	MCQUAY	UAVS6S13	VERTICAL UNIT VENTILATOR	86"	30"	22"	1250	350	N/A	WATER	4	80.0	67.0	59.5	56.4	43.0	57.0	39,243	26,459	5.61	2.25	47.6	116.6	200	148	90,800	3.50	1.80	1/4	120	1	
UV-152	MCQUAY	UAVS6S15	VERTICAL UNIT VENTILATOR	98"	30"	22"	1500	450	N/A	WATER	4	80.0	67.0	59.5	56.4	43.0	57.0	39,243	26,459	5.61	2.25	47.6	130.7	200	142	130,200	4.50	3.31	1/4	120	1	
UV-154	MCQUAY	UAVS6S13	VERTICAL UNIT VENTILATOR	86"	30"	22"	1250	350	N/A	WATER	4	80.0	67.0	59.5	56.4	43.0	57.0	39,243	26,459	5.61	2.25	47.6	116.6	200	148	90,800	3.50	1.80	1/4	120	1	
UV-156	MCQUAY	UAVS6S13	VERTICAL UNIT VENTILATOR	86"	30"	22"	1250	350	N/A	WATER	4	80.0	67.0	59.5	56.4	43.0	57.0	39,243	26,459	5.61	2.25	47.6	116.6	200	148	90,800	3.50	1.80	1/4	120	1	
UV-111	MCQUAY	UAVS6S15	VERTICAL UNIT VENTILATOR	98"	30"	22"	1500	450	N/A	WATER	4	80.0	67.0	58	55	43.0	57.0	50,651	33,751	7.24	2.98	47.6	130.7	200	142	130,200	4.50	3.31	1/4	120	1	
UV-109	MCQUAY	UAVS6S13	VERTICAL UNIT VENTILATOR	86"	30"	22"	1250	350	N/A	WATER	4	80.0	67.0	59.5	56.4	43.0	57.0	39,243	26,459	5.61	2.25	47.6	116.6	200	148	90,800	3.50	1.80	1/4	120	1	
UC-107	MCQUAY	UAVS6S15	VERTICAL UNIT VENTILATOR	98"	30"	22"	1500	450	N/A	WATER	4	80.0	67.0	58	55	43.0	57.0	50,651	33,751	7.24	2.98	47.6	130.7	200	142	130,200	4.50	3.31	1/4	120	1	
UV-114	MCQUAY	UAVS6S13	VERTICAL UNIT VENTILATOR	86"	30"	22"	1250	350	N/A	WATER	4	80.0	67.0	59.5	56.4	43.0	57.0	39,243	26,459	5.61	2.25	47.6	116.6	200	148	90,800	3.50	1.80	1/4	120	1	
UV-112	MCQUAY	UAVS6S15	VERTICAL UNIT VENTILATOR	98"	30"	22"	1500	450	N/A	WATER	4	80.0	67.0	58	55	43.0	57.0	50,651	33,751	7.24	2.98	47.6	130.7	200	142	130,200	4.50	3.31	1/4	120	1	
UV-108	MCQUAY	UAVS6S13	VERTICAL UNIT VENTILATOR	86"	30"	22"	1250	350	N/A	WATER	4	80.0	67.0	59.5	56.4	43.0	57.0	39,243	26,459	5.61	2.25	47.6	116.6	200	148	90,800	3.50	1.80	1/4	120	1	
UV-106	MCQUAY	UAVS6S13	VERTICAL UNIT VENTILATOR	86"	30"	22"	1250	350	N/A	WATER	4	80.0	67.0	59.5	56.4	43.0	57.0	39,243	26,459	5.61	2.25	47.6	116.6	200	148	90,800	3.50	1.80	1/4	120	1	
UV-105	MCQUAY	UAVS6S15	VERTICAL UNIT VENTILATOR	98"	30"	22"	1500	450	N/A	WATER	4	80.0	67.0	58	55	43.0	57.0	50,651	33,751	7.24	2.98	47.6	130.7	200	142	130,200	4.50	3.31	1/4	120	1	
UV-103	MCQUAY	UAVS6S15	VERTICAL UNIT VENTILATOR	98"	30"	22"	1500	450	N/A	WATER	4	80.0	67.0	58	55	43.0	57.0	50,651	33,751	7.24	2.98	47.6	130.7	200	142	130,200	4.50	3.31	1/4	120	1	
UV-100A	MCQUAY	UAVS6S15	VERTICAL UNIT VENTILATOR	98"	30"	22"	1500	450	N/A	WATER	4	80.0	67.0	58	55	43.0	57.0	50,651	33,751	7.24	2.98	47.6	130.7	200	142	130,200	4.50	3.31	1/4	120	1	
UV-100B	MCQUAY	UAVS6S15	VERTICAL UNIT VENTILATOR	98"	30"	22"	1500	450	N/A	WATER	4	80.0	67.0	58	55	43.0	57.0	50,651	33,751	7.24	2.98	47.6	130.7	200	142	130,200	4.50	3.31	1/4	120	1	
UV-224	MCQUAY	UAVS6S13	VERTICAL UNIT VENTILATOR	86"	30"	22"	1250	350	N/A	WATER	4	80.0	67.0	59.5	56.4	43.0	57.0	39,243	26,459	5.61	2.25	47.6	116.6	200	148	90,800	3.50	1.80	1/4	120	1	
UV-227	MCQUAY	UAVS6S13	VERTICAL UNIT VENTILATOR	86"	30"	22"	1250	350	N/A	WATER	4	80.0	67.0	59.5	56.4	43.0	57.0	39,243	26,459	5.61	2.25	47.6	116.6	200	148	90,800	3.50	1.80	1/4	120	1	
UV-229	MCQUAY	UAVS6S13	VERTICAL UNIT VENTILATOR	86"	30"	22"	1250	350	N/A	WATER	4	80.0	67.0	59.5	56.4	43.0	57.0	39,243	26,459	5.61	2.25	47.6	116.6	200	148	90,800	3.50	1.80	1/4	120	1	
UV-231	MCQUAY	UAVS6S13	VERTICAL UNIT VENTILATOR	86"	30"	22"	1250	350	N/A	WATER	4	80.0	67.0	59.5	56.4	43.0	57.0	39,243	26,459	5.61	2.25	47.6	116.6	200	148	90,800	3.50	1.80	1/4	120	1	
UV-233	MCQUAY	UAVS6S13	VERTICAL UNIT VENTILATOR	86"	30"	22"	1250	350	N/A	WATER	4	80.0	67.0	59.5	56.4	43.0	57.0	39,243	26,459	5.61	2.25	47.6	116.6	200	148	90,800	3.50	1.80	1/4	120	1	
UV-222	MCQUAY	UAVS6S13	VERTICAL UNIT VENTILATOR	86"	30"	22"	1250	350	N/A	WATER	4	80.0	67.0	59.5	56.4	43.0	57.0	39,243	26,459	5.61	2.25	47.6	116.6	200	148	90,800	3.50	1.80	1/4	120	1	
UV-223	MCQUAY	UAVS6S13	VERTICAL UNIT VENTILATOR	86"	30"	22"	1250	350	N/A	WATER	4	80.0	67.0	59.5	56.4	43.0	57.0	39,243	26,459	5.61	2.25	47.6	116.6	200	148	90,800	3.50	1.80	1/4	120	1	
UV-226	MCQUAY	UAVS6S13	VERTICAL UNIT VENTILATOR	86"	30"	22"	1250	350	N/A	WATER	4	80.0	67.0	59.5	56.4	43.0	57.0	39,243	26,459	5.61	2.25	47.6	116.6	200	148	90,800	3.50	1.80	1/4	120	1	
UV-228	MCQUAY	UAVS6S13	VERTICAL UNIT VENTILATOR	86"	30"	22"	1250	350	N/A	WATER	4	80.0	67.0	59.5	56.4	43.0	57.0	39,243	26,459	5.61	2.25	47.6	116.6	200	148	90,800	3.50	1.80	1/4	120	1	
UV-230	MCQUAY	UAVS6S13	VERTICAL UNIT VENTILATOR	86"	30"	22"	1250	350	N/A	WATER	4	80.0	67.0	59.5	56.4	43.0	57.0	39,243	26,459	5.61	2.25	47.6	116.6	200	148	90,800	3.50	1.80	1/4	120	1	
UV-236	MCQUAY	UAVS6S13	VERTICAL UNIT VENTILATOR	86"	30"	22"	1250	350	N/A	WATER	4	80.0	67.0	59.5	56.4	43.0	57.0	39,243	26,459	5.61	2.25	47.6	116.6	200	148	90,800	3.50	1.80	1/4	120	1	
UV-238	MCQUAY	UAVS6S13	VERTICAL UNIT VENTILATOR	86"	30"	22"	1250	350	N/A	WATER	4	80.0	67.0	59.5	56.4	43.0	57.0	39,243	26,459	5.61	2.25	47.6	116.6	200	148	90,800	3.50	1.80	1/4	120	1	
UV-240	MCQUAY	UAVS6S13	VERTICAL UNIT VENTILATOR	86"	30"	22"	1250	350	N/A	WATER	4	80.0	67.0	59.5	56.4	43.0	57.0	39,243	26,459	5.61	2.25	47.6	116.6	200	148	90,800	3.50	1.80	1/4	120	1	
UV-242	MCQUAY	UAVS6S13	VERTICAL UNIT VENTILATOR	86"	30"	22"	1250	350	N/A	WATER	4	80.0	67.0	59.5	56.4	43.0	57.0	39,243	26,459	5.61	2.25	47.6	116.6	200	148	90,800	3.50	1.80	1/4	120	1	
UV-244	MCQUAY	UAVV6S10	VERTICAL UNIT VENTILATOR	74"	30"	22"	1,000	300	N/A	WATER	4	80.0	67.0	59.2	56	43.0	57.0	32,602	21,675	4.66	2.28	47.6	112.5	200	145	69,000	2.50	1.30	1/4	120	1	
UV-232	MCQUAY	UAVS6S13	VERTICAL UNIT VENTILATOR	86"	30"	22"	1250	350	N/A	WATER	4	80.0	67.0	59.5	56.4	43.0	57.0	39,243	26,459	5.61	2.25	47.6	116.6	200	148	90,800	3.50	1.80	1/4	120	1	
UV-235	MCQUAY	UAVS6S13	VERTICAL UNIT VENTILATOR	86"	30"	22"	1250	350	N/A	WATER	4	80.0	67.0	59.5	56.4	43.0	57.0	39,243	26,459	5.61	2.25	47.6	116.6	200	148	90,800	3.50	1.80	1/4	120	1	
UV-237	MCQUAY	UAVS6S13	VERTICAL UNIT VENTILATOR	86"	30"	22"	1250	350	N/A	WATER	4	80.0	67.0	59.5	56.4	43.0	57.0	39,243	26,459	5.61	2.25	47.6	116.6	200	148	90,800	3.50	1.80	1/4	120	1	
UV-239	MCQUAY	UAVS6S13	VERTICAL UNIT VENTILATOR	86"	30"	22"	1250	350	N/A	WATER	4	80.0	67.0	59.5	56.4	43.0	57.0	39,243	26,459	5.61	2.25	47.6	116.6	200	148	90,800	3.50	1.80	1/4	120	1	
UV-241	MCQUAY	UAVS6S13	VERTICAL UNIT VENTILATOR	86"	30"	22"	1250	350	N/A	WATER	4	80.0	67.0	59.5	56.4	43.0	57.0	39,243	26,459	5.61	2.25	47.6	116.6	200	148	90,800	3.50	1.80	1/4	120	1	
UV-243	MCQUAY	UAVS6S13	VERTICAL UNIT VENTILATOR	86"	30"	22"	1250	350	N/A	WATER	4	80.0	67.0	59.5	56.4	43.0	57.0	39,243	26,459	5.61	2.25	47.6	116.6	200	148	90,800	3.50	1.80	1/4	120	1	

NOTES:

1. REMOVE EXISTING DX COOLING COIL AND INSTALL NEW OWNER FURNISHED CHILLED WATER COIL IN ACCORDANCE WITH MANUFACTURERS INSTALLATION INSTRUCTIONS.

NEW UNIT VENTILATOR SCHEDULE

MARK	DESIGN BASIS MAKE	DESIGN BASIS MODEL / SIZE	DESCRIPTION	UNIT DIMENSIONS LENGTH	UNIT DIMENSIONS HEIGHT	UNIT DIMENSIONS DEPTH	NOMINAL AIRFLOW CFM	OUTSIDE AIR CFM	UNIT FAN SPEED	FLUID TYPE	COILS ROWS	COOLING COIL EAT (DB)	COOLING COIL EAT (WB)	COOLING COIL LAT (DB)	COOLING COIL LAT (WB)	COOLING COIL EWT (F)	COOLING COIL LWT (F)	COOLING COIL TOTAL CAP. BTUH	COOLING COIL SENSIBLE CAP. BTUH	COOLING COIL FLOW GPM	COOLING COIL WATER PD	HEATING COIL EAT (F)	HEATING COIL LAT (F)	HEATING COIL EWT (F)	HEATING COIL LWT (F)	HEATING COIL TOTAL CAP. BTUH	HEATING COIL FLOW GPM	HEATING COIL WATER PD	MOTOR HP	MOTOR VOLTS	MOTOR PHASE	REMARKS
UV-113	DAIKIN	UAVV9S15	VERTICAL UNIT VENTILATOR	98"	30-1/8"	21.88"	1414	425	MED	WATER	4	80.0	67.0	58	55.3	43.0	57.0	50,651	33,751	7.24	2.98	70.0	110.5	180	117	62,107	2.00	0.65	1/4	120	1	SEE NOTES 1, 2, 3 & 5
UV-147A	DAIKIN	UAHF6 / V20	HORIZONTAL UNIT VENTILATOR	98"	16-5/8"	40"	2,000	575	100%	WATER	5	78.0	64.0	56.9	53.7	44.0	58.0	60,186	45,842	11.02	13.55	45.0	131.5	150	110	187,812	9.40	8.09	3/4	115	1	SEE NOTES 1, 2, 3 & 5
UV-147B	DAIKIN	UAHF6 / V20	HORIZONTAL UNIT VENTILATOR	98"	16-5/8"	40"	2,000	575	100%	WATER	5	78.0	64.0	56.9	53.7	44.0	58.0	60,186	45,842	11.02	13.55	45.0	131.5	150	110	187,812	9.40	8.09	3/4	115	1	SEE NOTES 1, 2, 3 & 5
UV-167	DAIKIN	UAVV9S15	VERTICAL UNIT VENTILATOR	98"	30-1/8"	21.88"	1414	425	MED	WATER	4	80.0	67.0	58	55.3	43.0	57.0	50,651	33,751	7.24	2.98	70.0	110.5	180	117	62,107	2.00	0.65	1/4	120	1	SEE NOTES 1, 2, 3 & 5
UV-169A	DAIKIN	UAVV9S15	VERTICAL UNIT VENTILATOR	98"	30-1/8"	21.88"	1414	425	MED	WATER	4	80.0	67.0	58	55.3	43.0	57.0	50,651	33,751	7.24	2.98	70.0	110.5	180	117	62,107	2.00	0.65	1/4	120	1	SEE NOTES 1, 2, 3 & 5
UV-170	DAIKIN	UAVV9S15	VERTICAL UNIT VENTILATOR	98"	30-1/8"	21.88"	1414	425	MED	WATER	4	80.0	67.0	58	55.3	43.0	57.0	50,651	33,751	7.24	2.98	70.0	110.5	180	117	62,107	2.00	0.65	1/4	120	1	SEE NOTES 1, 2, 3 & 5
UV-169B	DAIKIN	UAVV9S15	VERTICAL UNIT VENTILATOR	98"	30-1/8"	21.88"	1414	425	MED	WATER	4	80.0	67.0	58	55.3	43.0	57.0	50,651	33,751	7.24	2.98	70.0	110.5	180	117	62,107	2.00	0.65	1/4	120	1	SEE NOTES 1, 2, 3 & 5
UV-171	DAIKIN	UAVV9S15	VERTICAL UNIT VENTILATOR	98"	30-1/8"	21.88"	1414	425	MED	WATER	4	80.0	67.0	58	55.3	43.0	57.0	50,651	33,751	7.24	2.98	70.0	110.5	180	117	62,107	2.00	0.65	1/4	120	1	SEE NOTES 1, 2, 3 & 5
UV-172	DAIKIN	UAVV9S15	VERTICAL UNIT VENTILATOR	98"	30-1/8"	21.88"	1414	425	MED	WATER	4	80.0	67.0	58	55.3	43.0	57.0	50,651	33,751	7.24	2.98	70.0	110.5	180	117	62,107	2.00	0.65	1/4	120	1	SEE NOTES 1, 2, 3 & 5
UV-110	DAIKIN	UAVV9S15	VERTICAL UNIT VENTILATOR	98"	30-1/8"	21.88"	1414	425	MED	WATER	4	80.0	67.0	58	55.3	43.0	57.0	50,651	33,751	7.24	2.98	70.0	110.5	180	117	62,107	2.00	0.65	1/4	120	1	SEE NOTES 1, 2, 3 & 5
UV-173	DAIKIN	UAVV9S15	VERTICAL UNIT VENTILATOR	98"	30-1/8"	21.88"	1414	425	MED	WATER	4	80.0	67.0	58	55.3	43.0	57.0	50,651	33,751	7.24	2.98	70.0	110.5	180	117	62,107	2.00	0.65	1/4	120	1	SEE NOTES 1, 2, 3 & 5

ADD #1

ADD #1

NOTES:

1. THE CONTROLS FOR ALL UNIT VENTILATORS SHALL FIELD PROVIDED AND FIELD INSTALLED BY THE TEMPERATURE CONTROL CONTRACTOR.
2. ALL UNIT VENTILATORS SHALL HAVE A 12" UTILITY COMPARTMENT AT END OF UNIT WITH PIPING CONNECTIONS.
3. PROVIDE FACTORY MOUNTED DISCONNECT SWITCH
4. PROVIDE INSULATED ADAPTER BACK UNIT WITH TOP OA INLET.
5. THE FULL LOAD AMPS SHALL NOT EXCEED THE FOLLOWING FOR EACH MOTOR SIZE LISTED: 1/5 HP -3.7 A, 1/4 HP -2.7 A, 1/3 HP -5 A, 1/2 HP -5 A, & 3/4 HP -9.6 A.
6. PROVIDE INSULATED ADAPTER BACK UNIT WITH BACK OA INLET.

LICENSED PROFESSIONAL ENGINEER RYAN C. REEF 062-056761 EXPIRES: 30NOV23 STATE OF ILLINOIS
DATE: 2/21/2022

KEITH Engineering Design
www.kedmep.com
707 NE Jefferson Ave Peoria, IL : 61603
309 / 938-4005 : office
309 / 214-0063 : fax

ROCKFORD PUBLIC SCHOOLS

FEHR GRAHAM ENGINEERING & ENVIRONMENTAL
230 WOODLAWN AVENUE AURORA, ILLINOIS 60506

Saavedra Group Architects
504 N CHURCH STREET ROCKFORD, ILLINOIS 61103

No.	Date	Revisions
1	3/17/2022	ADDENDUM 1

GUILFORD HIGH SCHOOL
HVAC UPGRADE
ROCKFORD, ILLINOIS

Sheet Title: HEATING SCHEDULES

Proj. No.: 2251
Date: 02/21/2022
Drawn: GBW
Approved: RCR
Sheet No.: H502

HOT WATER FINNED TUBE CONVECTOR SCHEDULE

MARK	DESIGN BASIS		ELEMENT DESCRIPTION	ELEMENT SIZE			TOTAL CAPACITY (BTUH)	TUBE SIZE (IN)	# OF ELEMENTS	FIN THICKNESS (IN)	FINS PER FT	EWT (F)	CAPACITY PER FT. (BTUH / FT)	FLOW RATE (GPM)	REMARKS
	MAKE	MODEL / SERIES		LENGTH (FT)	HEIGHT (IN)	DEPTH (IN)									
FT-100.1	MODINE	SP 014	ALUMINUM	3	3 1/4	2 3/4	2,460	3/4	2	0.01	50	160	820	0.246	SEE NOTES 1,2, &3
FT-100.2	MODINE	SP 014	ALUMINUM	3	3 1/4	2 3/4	2,460	3/4	2	0.01	50	160	820	0.246	SEE NOTES 1,2, &3
FT-100.3	MODINE	SP 014	ALUMINUM	3	3 1/4	2 3/4	2,460	3/4	2	0.01	50	160	820	0.246	SEE NOTES 1,2, &3
FT-100.4	MODINE	SP 014	ALUMINUM	3	3 1/4	2 3/4	2,460	3/4	2	0.01	50	160	820	0.246	SEE NOTES 1,2, &3
FT-100.5	MODINE	SP 014	ALUMINUM	3	3 1/4	2 3/4	2,460	3/4	2	0.01	50	160	820	0.246	SEE NOTES 1,2, &3
FT-100.6	MODINE	SP 014	ALUMINUM	3	3 1/4	2 3/4	2,460	3/4	2	0.01	50	160	820	0.246	SEE NOTES 1,2, &3
FT-100.7	MODINE	SP 014	ALUMINUM	3	3 1/4	2 3/4	2,460	3/4	2	0.01	50	160	820	0.246	SEE NOTES 1,2, &3
FT-101	MODINE	SP 014	ALUMINUM	64	3 1/4	2 3/4	52,480	3/4	2	0.01	50	160	820	5.248	SEE NOTES 1,2, &3
FT-102	MODINE	SP 014	ALUMINUM	14	3 1/4	2 3/4	11,480	3/4	2	0.01	50	160	820	1.148	SEE NOTES 1,2, &3
FT-103.1	MODINE	SP 014	ALUMINUM	3	3 1/4	2 3/4	2,460	3/4	2	0.01	50	160	820	0.246	SEE NOTES 1,2, &3
FT-103.2	MODINE	SP 014	ALUMINUM	3	3 1/4	2 3/4	2,460	3/4	2	0.01	50	160	820	0.246	SEE NOTES 1,2, &3
FT-103.3	MODINE	SP 014	ALUMINUM	3	3 1/4	2 3/4	2,460	3/4	2	0.01	50	160	820	0.246	SEE NOTES 1,2, &3
FT-103.4	MODINE	SP 014	ALUMINUM	3	3 1/4	2 3/4	2,460	3/4	2	0.01	50	160	820	0.246	SEE NOTES 1,2, &3
FT-105.1	MODINE	SP 014	ALUMINUM	3	3 1/4	2 3/4	2,460	3/4	2	0.01	50	160	820	0.246	SEE NOTES 1,2, &3
FT-105.2	MODINE	SP 014	ALUMINUM	3	3 1/4	2 3/4	2,460	3/4	2	0.01	50	160	820	0.246	SEE NOTES 1,2, &3
FT-105.3	MODINE	SP 014	ALUMINUM	3	3 1/4	2 3/4	2,460	3/4	2	0.01	50	160	820	0.246	SEE NOTES 1,2, &3
FT-105.4	MODINE	SP 014	ALUMINUM	3	3 1/4	2 3/4	2,460	3/4	2	0.01	50	160	820	0.246	SEE NOTES 1,2, &3
FT-105.5	MODINE	SP 014	ALUMINUM	3	3 1/4	2 3/4	2,460	3/4	2	0.01	50	160	820	0.246	SEE NOTES 1,2, &3
FT-114	MODINE	S 018	ALUMINUM	6.5	4 1/4	4 1/4	9,425	1 1/4	2	0.01	50	160	1,450	0.9425	SEE NOTES 1,2, &3
FT-116	MODINE	S 018	ALUMINUM	10	4 1/4	4 1/4	14,500	1 1/4	2	0.01	50	160	1,450	1.45	SEE NOTES 1,2, &3
FT-133.1	MODINE	S 018	ALUMINUM	6.5	4 1/4	4 1/4	9,425	1 1/4	2	0.01	50	160	1,450	0.9425	SEE NOTES 1,2, &3
FT-152.1	MODINE	S 018	ALUMINUM	5	4 1/4	4 1/4	7,250	1 1/4	2	0.01	50	160	1,450	0.725	SEE NOTES 1,2, &3
FT-162A	MODINE	S 018	ALUMINUM	11.5	4 1/4	4 1/4	16,675	1 1/4	2	0.01	50	160	1,450	1.6675	SEE NOTES 1,2, &3
FT-162B	MODINE	S 018	ALUMINUM	50	4 1/4	4 1/4	72,500	1 1/4	2	0.01	50	160	1,450	7.25	SEE NOTES 1,2, &3
FT-163	MODINE	SP 010	ALUMINUM	10	3 1/4	2 3/4	5,200	3/4	1	0.01	50	160	520	0.52	SEE NOTES 1,2, &3
FT-182.2	MODINE	S 018	ALUMINUM	5	4 1/4	4 1/4	7,250	1 1/4	2	0.01	50	160	1,450	0.725	SEE NOTES 1,2, &3
FT-182.3	MODINE	S 018	ALUMINUM	5	4 1/4	4 1/4	7,250	1 1/4	2	0.01	50	160	1,450	0.725	SEE NOTES 1,2, &3
FT-183	MODINE	SP 010	ALUMINUM	8	3 1/4	2 3/4	4,160	3/4	1	0.01	50	160	520	0.416	SEE NOTES 1,2, &3
FT-220	MODINE	SP 014	ALUMINUM	5	3 1/4	2 3/4	4,100	3/4	2	0.01	50	160	820	0.41	SEE NOTES 1,2, &3
FT-230	MODINE	S 018	ALUMINUM	9	4 1/4	4 1/4	13,050	1 1/4	2	0.01	50	160	1,450	1.305	SEE NOTES 1,2, &3
FT-234	MODINE	S 018	ALUMINUM	15	4 1/4	4 1/4	21,750	1 1/4	2	0.01	50	160	1,450	2.175	SEE NOTES 1,2, &3
FT-246	MODINE	SP 014	ALUMINUM	25	3 1/4	2 3/4	20,500	3/4	2	0.01	50	160	820	2.05	SEE NOTES 1,2, &3
FT-5	MODINE	S 024	ALUMINUM	5	4 1/4	4 1/4	5,950	1 1/4	1	0.01	50	160	1190	0.595	SEE NOTES 1,2, &3
FT-A100	MODINE	SP 014	ALUMINUM	25	3 1/4	2 3/4	20,500	3/4	2	0.01	50	160	820	2.05	SEE NOTES 1,2, &3
FT-AD120	MODINE	S 012	ALUMINUM	7	4 1/4	4 1/4	6,440	1 1/4	1	0.01	50	160	920	0.644	SEE NOTES 1,2, &3
FT-C106A	MODINE	SP 014	ALUMINUM	23	3 1/4	2 3/4	18,860	3/4	2	0.01	50	160	820	1.886	SEE NOTES 1,2, &3
FT-C106B	MODINE	SP 014	ALUMINUM	23	3 1/4	2 3/4	18,860	3/4	2	0.01	50	160	820	1.886	SEE NOTES 1,2, &3
FT-C202	MODINE	S 018	ALUMINUM	11	4 1/4	4 1/4	15,950	3/4	2	0.01	50	160	1,450	1.595	SEE NOTES 1,2, &3
FT-G100	MODINE	SP 014	ALUMINUM	50	3 1/4	2 3/4	41,000	3/4	2	0.01	50	160	820	4.1	SEE NOTES 1,2, &3
FT-G102.4	MODINE	S 012	ALUMINUM	4	4 1/4	4 1/4	3,680	3/4	1	0.01	50	160	920	0.368	SEE NOTES 1,2, &3
FT-G105.12	MODINE	S 012	ALUMINUM	5	4 1/4	4 1/4	4,600	3/4	1	0.01	50	160	920	0.46	SEE NOTES 1,2, &3
FT-G105.21	MODINE	S 012	ALUMINUM	5	4 1/4	4 1/4	4,600	3/4	1	0.01	50	160	920	0.46	SEE NOTES 1,2, &3
FT-G105.3	MODINE	S 012	ALUMINUM	5	4 1/4	4 1/4	4,600	3/4	1	0.01	50	160	920	0.46	SEE NOTES 1,2, &3
FT-G105.6	MODINE	S 012	ALUMINUM	5	4 1/4	4 1/4	4,600	3/4	1	0.01	50	160	920	0.46	SEE NOTES 1,2, &3
FT-G105.7	MODINE	S 012	ALUMINUM	4	4 1/4	4 1/4	3,680	3/4	1	0.01	50	160	920	0.368	SEE NOTES 1,2, &3
FT-G105.8	MODINE	S 012	ALUMINUM	5	4 1/4	4 1/4	4,600	3/4	1	0.01	50	160	920	0.46	SEE NOTES 1,2, &3
FT-G109.5	MODINE	S 012	ALUMINUM	11	4 1/4	4 1/4	10,120	3/4	1	0.01	50	160	920	1.012	SEE NOTES 1,2, &3
FT-G111	MODINE	S 012	ALUMINUM	12	4 1/4	4 1/4	11,040	3/4	1	0.01	50	160	920	1.104	SEE NOTES 1,2, &3
FT-G109A	MODINE	S 012	ALUMINUM	3.6	4 1/4	4 1/4	3,312	3/4	1	0.01	50	160	920	0.3312	SEE NOTES 1,2, &3
FT-G109B	MODINE	S 012	ALUMINUM	3	4 1/4	4 1/4	2,760	3/4	1	0.01	50	160	920	0.276	SEE NOTES 1,2, &3
FT-P100	MODINE	S 010	ALUMINUM	48	3 1/4	2 3/4	24,960	3/4	1	0.01	50	160	520	2.496	SEE NOTES 1,2, &3
FT-P100A	MODINE	S 012	ALUMINUM	2	4 1/4	4 1/4	1,840	3/4	1	0.01	50	160	920	0.184	SEE NOTES 1,2, &3
FT-P100B	MODINE	S 012	ALUMINUM	2	4 1/4	4 1/4	1,840	3/4	1	0.01	50	160	920	0.184	SEE NOTES 1,2, &3
FT-P100C	MODINE	S 012	ALUMINUM	3	4 1/4	4 1/4	2,760	3/4	1	0.01	50	160	920	0.276	SEE NOTES 1,2, &3
FT-P100D	MODINE	S 012	ALUMINUM	3	4 1/4	4 1/4	2,760	3/4	1	0.01	50	160	920	0.276	SEE NOTES 1,2, &3
FT-P100E	MODINE	S 012	ALUMINUM	2.5	4 1/4	4 1/4	2,300	3/4	1	0.01	50	160	920	0.23	SEE NOTES 1,2, &3
FT-S2	MODINE	S 012	ALUMINUM	7	4 1/4	4 1/4	6,440	3/4	1	0.01	50	160	920	0.644	SEE NOTES 1,2, &3

NOTES:

1. PROVIDE STANDARD COLOR SELECTION, ARCHITECT TO SELECT COLOR
2. PROVIDE ALL SUPPLY TRIM ACCESSORIES INCLUDING CENTER TRIM AND END CAPS TO CONCEAL HOT WATER SUPPLY AND RETURN PIPING AS REQUIRED
3. MECHANICAL CONTRACTOR SHALL VERIFY ALL DIMENSTION IN FIELD PRIOR TO EQUIPMENT ORDER.

UNIT HEATER SCHEDULE

MARK	DESIGN BASIS		DESCRIPTION	DESIGN AIRFLOW CFM	HEATING CAPACITY (BTUH)	FLUID TYPE	HOT WATER (GPM)	EWT (F)	LWT (F)	EAT (F)	LAT (F)	FLUID PD	ELECTRICAL DATA			REMARKS
	MAKE	MODEL / SERIES											HP	VOLTS	PHASE	
UH-142.1	MODINE	V/VN 193L	VERTICAL UNIT HEATER	3,710	112,500	WATER	11.7	180.0	160.0	60.0	89.0	1.30	1/3	120	1	SEE NOTES 1 & 2
UH-170	MODINE	V/VN 193L	VERTICAL UNIT HEATER	3,710	112,500	WATER	11.7	180.0	160.0	60.0	89.0	1.30	1/3	120	1	SEE NOTES 1 & 2
UH-170.1	MODINE	V/VN 193L	VERTICAL UNIT HEATER	3,710	112,500	WATER	11.7	180.0	160.0	60.0	89.0	1.30	1/3	120	1	SEE NOTES 1 & 2
UH-173	MODINE	V/VN 193L	VERTICAL UNIT HEATER	3,710	112,500	WATER	11.7	180.0	160.0	60.0	89.0	1.30	1/3	120	1	SEE NOTES 1 & 2
UH-A112	MODINE	V/VN 193L	VERTICAL UNIT HEATER	3,710	112,500	WATER	11.7	180.0	160.0	60.0	89.0	1.30	1/3	120	1	SEE NOTES 1 & 2
UH-1	MODINE	HSB 86L	HORIZONTAL UNIT HEATER	1,510	44,600	WATER	4.6	180.0	160.0	60.0	89.0	0.60	1/12	120	1	SEE NOTES 1 & 2
UH-2	MODINE	HSB 86L	HORIZONTAL UNIT HEATER	1,510	44,600	WATER	4.6	180.0	160.0	60.0	89.0	0.60	1/12	120	1	SEE NOTES 1 & 2
UH-3	MODINE	HSB 86L	HORIZONTAL UNIT HEATER	1,510	44,600	WATER	4.6	180.0	160.0	60.0	89.0	0.60	1/12	120	1	SEE NOTES 1 & 2
UH-4	MODINE	HSB 86L	HORIZONTAL UNIT HEATER	1,510	44,600	WATER	4.6	180.0	160.0	60.0	89.0	0.60	1/12	120	1	SEE NOTES 1 & 2
UH-5	MODINE	HSB 86L	HORIZONTAL UNIT HEATER	1,510	44,600	WATER	4.6	180.0	160.0	60.0	89.0	0.60	1/12	120	1	SEE NOTES 1 & 2
UH-6	MODINE	HSB 86L	HORIZONTAL UNIT HEATER	1,510	44,600	WATER	4.6	180.0	160.0	60.0	89.0	0.60	1/12	120	1	SEE NOTES 1 & 2
UH-7	MODINE	HSB 86L	HORIZONTAL UNIT HEATER	1,510	44,600	WATER	4.6	180.0	160.0	60.0	89.0	0.60	1/12	120	1	SEE NOTES 1 & 2
UH-8	MODINE	HSB 86L	HORIZONTAL UNIT HEATER	1,510	44,600	WATER	4.6	180.0	160.0	60.0	89.0	0.60	1/12	120	1	SEE NOTES 1 & 2
UH-9	MODINE	HSB 86L	HORIZONTAL UNIT HEATER	1,510	44,600	WATER	4.6	180.0	160.0	60.0	89.0	0.60	1/12	120	1	SEE NOTES 1 & 2
UH-10	MODINE	HSB 86L	HORIZONTAL UNIT HEATER	1,510	44,600	WATER	4.6	180.0	160.0	60.0	89.0	0.60	1/12	120	1	SEE NOTES 1 & 2

NOTES:

1. PROVIDE FACTORY MOUNTED DISCONNECT SWITCH.
2. PROVIDE SOLID STATE MOTOR SPEED CONTROLLER

ADD #1

LICENSED PROFESSIONAL ENGINEER
RYAN C. REEF
062-056761
EXPIRES: 30NOV23
STATE OF ILLINOIS
DATE: 2/21/2022

KEITH Engineering Design
www.kedmep.com
707 NE Jefferson Ave
Peoria, IL : 61603
309 / 938-4005 : office
309 / 214-0063 : fax

ROCKFORD PUBLIC SCHOOLS

FEHR GRAHAM
ENGINEERING & ENVIRONMENTAL
230 WOODLAWN AVENUE
AURORA, ILLINOIS 60506

Saavedra Group Architects
504 N CHURCH STREET
ROCKFORD, ILLINOIS 61103

No.	Date	Revisions
1	3/17/2022	ADDENDUM 1

GUILFORD HIGH SCHOOL
HVAC UPGRADE

ROCKFORD, ILLINOIS

Sheet Title:
HEATING SCHEDULES

Proj. No.: 2251
Date: 02/21/2022
Drawn: GBW
Approved: RCR
Sheet No.:
H504

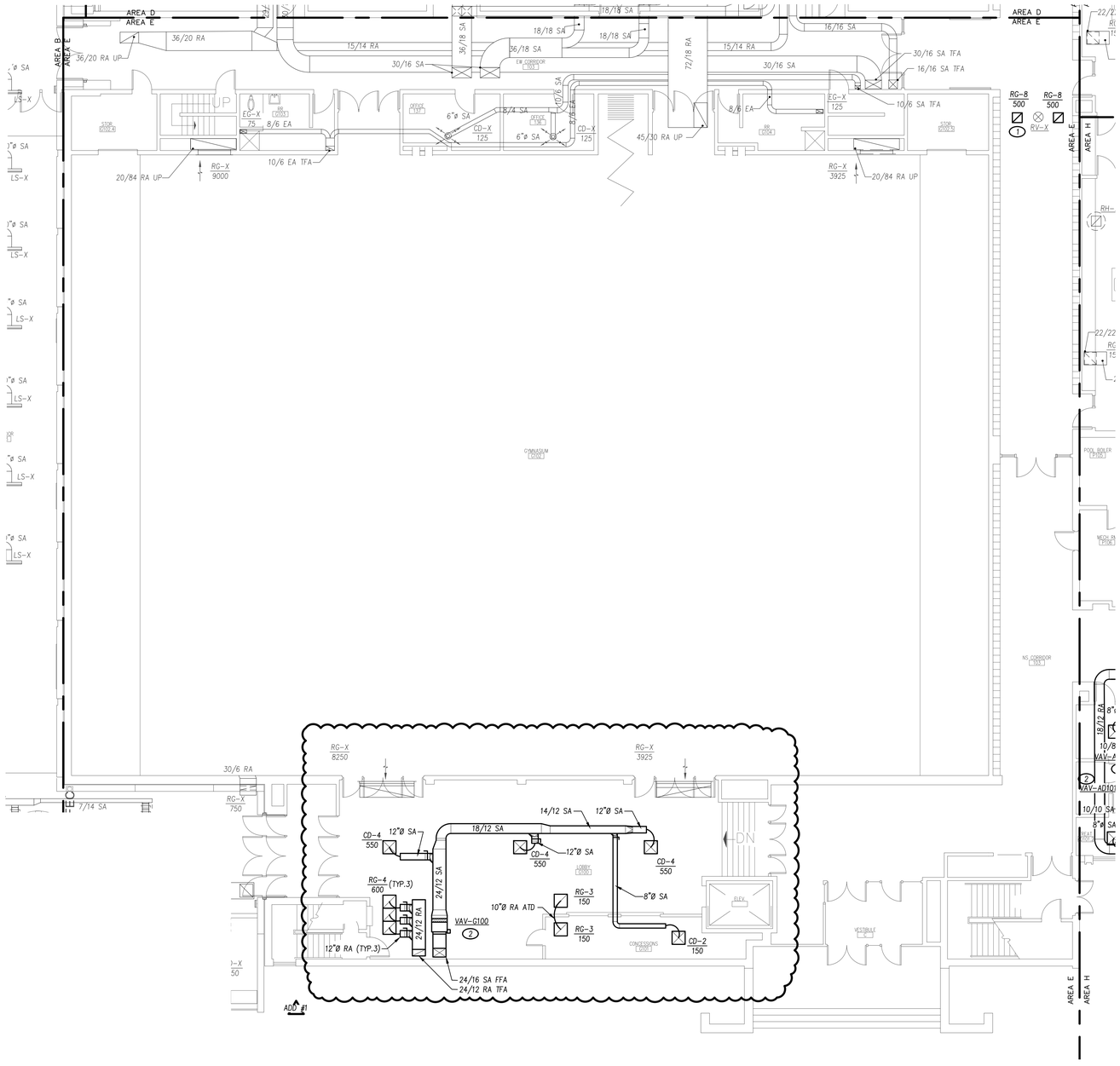

1 FIRST FLOOR PLAN - VENTILATING NEW WORK - AREA E
SCALE: 1/8" = 1'-0"
NORTH

GENERAL NOTES

BASE BID

1. ALL EXISTING DUCTWORK SHALL REMAIN AS-IS. (SHEET SHOWN FOR TEST AND BALANCE REFERENCE.)
2. FURNISH AND INSTALL NEW CHILLED WATER SYSTEM AND PIPING AS IDENTIFIED ON HEATING DRAWINGS.

ALTERNATE BID #1

1. REFER TO HEATING DRAWINGS FOR ALTERNATE BID INFORMATION.

TEST AND BALANCE NOTE:

1. TEST AND BALANCE CONTRACTOR SHALL PROVIDE COMPREHENSIVE TESTING, ADJUSTING AND BALANCING OF ALL SUPPLY AND RETURN DIFFUSERS / GRILLES CONNECTED TO NEW AIR-HANDING UNITS.

VENTILATING NEW WORK KEYED NOTES:

1. PROVIDE ALL MATERIALS AND LABOR TO CONNECT NEW RELIEF GRILLES TO EXISTING DUCTWORK.
2. FURNISH AND INSTALL NEW HOT WATER REHEAT VARIABLE AIR VOLUME BOX PER MANUFACTURER'S INSTALLATION INSTRUCTIONS.
3. FURNISH AND INSTALL NEW FIRE DAMPER. SEE DETAIL 1/V400.

ADD #1

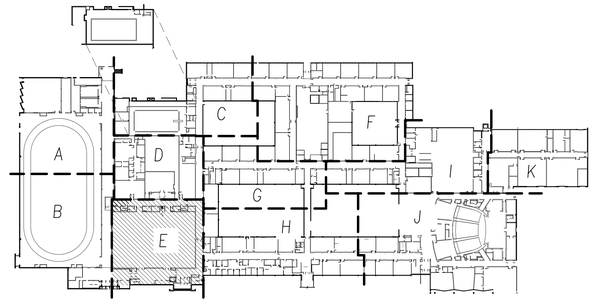

KEY PLAN
SCALE: NOT TO SCALE
NORTH

DATE: 2/21/2022

KEITH Engineering Design
www.keithmep.com
707 NE Jefferson Ave
Peoria, IL 61603
309 / 939-4005 : office
309 / 214-0063 : fax

ROCKFORD PUBLIC SCHOOLS
FEHR GRAHAM ENGINEERING & ENVIRONMENTAL
230 WOODLAWN AVENUE
AURORA, ILLINOIS 60506
Saavedra Group Architects
504 N CHURCH STREET
ROCKFORD, ILLINOIS 61103

No.	Date	Revisions
1	3/17/2022	ADDENDUM 1

GUILFORD HIGH SCHOOL
HVAC UPGRADE
ROCKFORD, ILLINOIS

Sheet Title: FIRST FLOOR PLAN - VENTILATING NEW WORK - AREA E

Proj. No.: 2251
Date: 02/21/2022
Drawn: GBW
Approved: RCR
Sheet No.: V11E

GENERAL NOTES

BASE BID

1. ALL EXISTING DUCTWORK SHALL REMAIN AS-IS. (SHEET SHOWN FOR TEST AND BALANCE REFERENCE.)
2. FURNISH AND INSTALL NEW CHILLED WATER SYSTEM AND PIPING AS IDENTIFIED ON HEATING DRAWINGS.

ALTERNATE BID #1

1. REFER TO HEATING DRAWINGS FOR ALTERNATE BID INFORMATION.

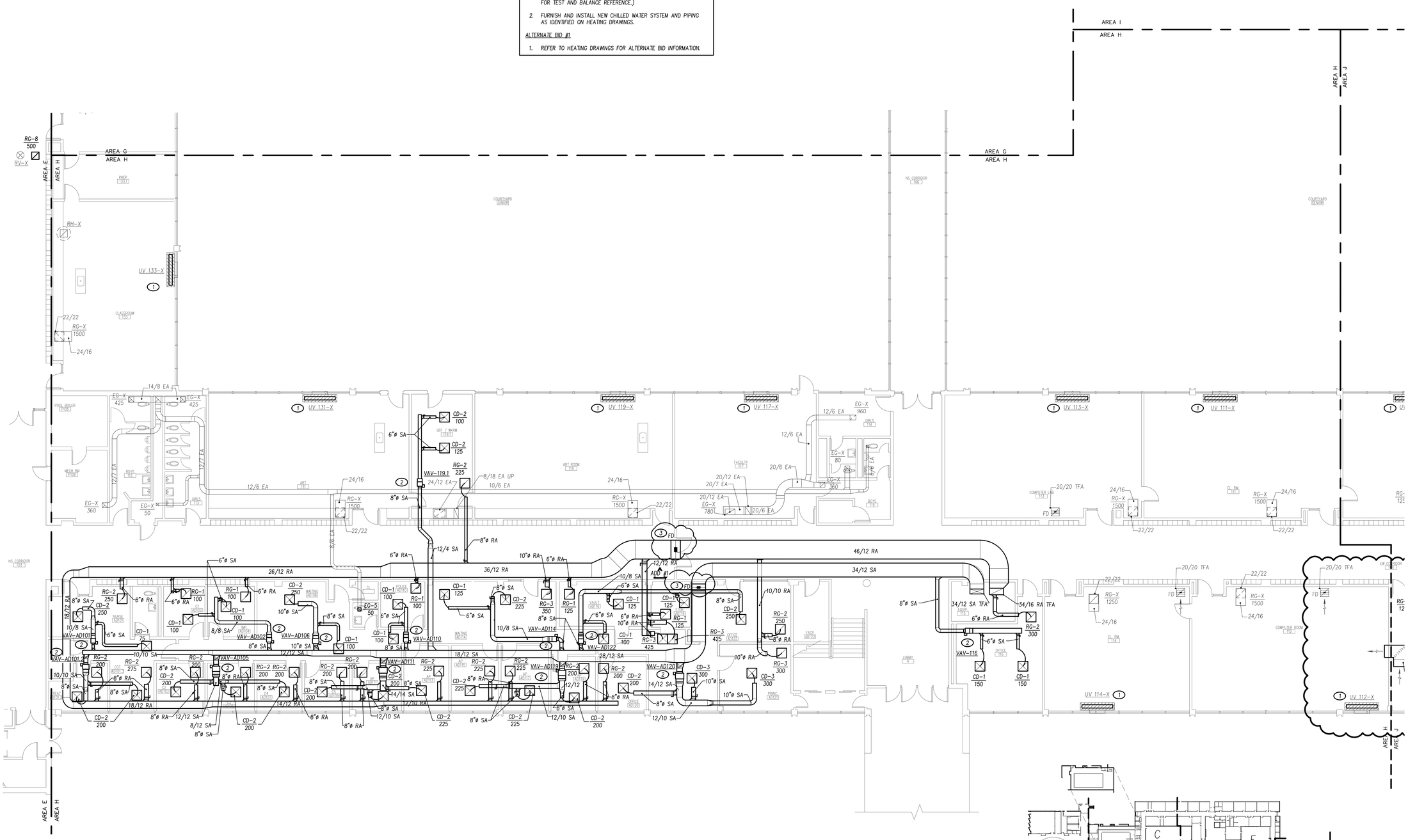

VENTILATING NEW WORK KEYED NOTES:

1. NEW CHILLED WATER COOLING COIL TO BE INSTALLED TO REPLACE EXISTING DX COIL. SEE HEATING SHEETS FOR DETAILS.
2. FURNISH AND INSTALL NEW HOT WATER REHEAT VARIABLE AIR VOLUME BOX PER MANUFACTURER'S INSTALLATION INSTRUCTIONS.
3. FURNISH AND INSTALL NEW FIRE DAMPER. SEE DETAIL 1/V400.

ADD #1

1 FIRST FLOOR PLAN - VENTILATING NEW WORK - AREA H

SCALE: 1/8" = 1'-0"

NORTH

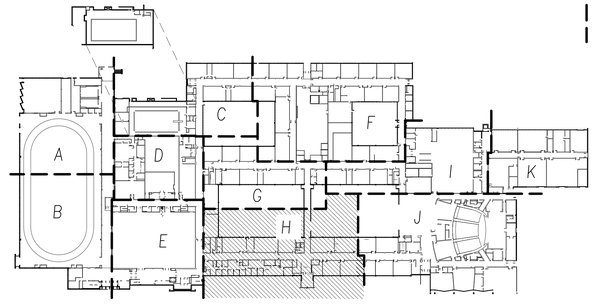

KEY PLAN

SCALE: NOT TO SCALE

NORTH

KEITH Engineering Design
www.keithmep.com
707 SE Jefferson Ave. Peoria, IL 61603
309 / 808-4000 - office
309 / 214-4060 - fax

ROCKFORD PUBLIC SCHOOLS
FEHR GRAHAM ENGINEERING & ENVIRONMENTAL
230 WOODLAWN AVENUE AURORA, ILLINOIS 60506
Saavedra Group Architects
504 N. CHURCH STREET ROCKFORD, ILLINOIS 61103

REG. PROFESSIONAL ENGINEER
REF. 062-056761
STATE OF ILLINOIS

DATE: 2/21/2022

No.	Date	Revisions
1	3/17/2022	ADDENDUM 1

GUILFORD HIGH SCHOOL HVAC UPGRADE

ROCKFORD, ILLINOIS

Sheet Title: FIRST FLOOR PLAN - VENTILATING NEW WORK, - AREA H

Proj. No.:	2251
Date:	02/21/2022
Drawn:	GBW
Approved:	RCR
Sheet No.:	V11H

VENTILATING NEW WORK KEYED NOTES:

1. NEW CHILLED WATER COOLING COIL TO BE INSTALLED TO REPLACE EXISTING DX COIL. SEE HEATING SHEETS FOR DETAILS.
2. PROVIDE ALL MATERIALS AND LABOR TO CONNECT NEW CEILING DIFFUSER/GRILLE TO EXISTING DUCTWORK AFTER NEW CEILING INSTALLATION.
3. FURNISH AND INSTALL NEW HOT WATER REHEAT VARIABLE AIR VOLUME BOX PER MANUFACTURER'S INSTALLATION INSTRUCTIONS.
4. FURNISH AND INSTALL NEW 16/8 BRICK VENT, WALL SLEEVE AND ALL ASSOCIATED DUCTWORK WITH NEW FAN COIL UNIT. PROVIDE ALL MATERIALS AND LABOR TO CUT NEW WALL OPENING. COORDINATE LOCATION WITH NEW FAN COIL UNIT PRIOR TO CUTTING EXTERIOR WALL.
5. FURNISH AND INSTALL NEW DUCT MOUNTED REHEAT COIL PER MANUFACTURER'S INSTALLATION INSTRUCTIONS.
6. FURNISH AND INSTALL NEW FIRE DAMPER. SEE DETAIL 1/V400.

ADD #1

GENERAL NOTES

BASE BID

1. FURNISH AND INSTALL NEW VAV BOXES, REHEAT COILS, DUCTWORK, AND GRILLES/DIFFUSERS AS IDENTIFIED ON DRAWINGS.
2. HEATING SYSTEM SHALL REMAIN AS IS.
3. FURNISH AND INSTALL NEW CHILLED WATER SYSTEM AND PIPING. PROVIDE SELECTIVE REPLACEMENT OF EXISTING HVAC EQUIPMENT AND INSTALLATION OF NEW EQUIPMENT AS IDENTIFIED ON HEATING DRAWINGS.

ALTERNATE BID #1

1. REFER TO HEATING DRAWINGS FOR ALTERNATE BID INFORMATION.

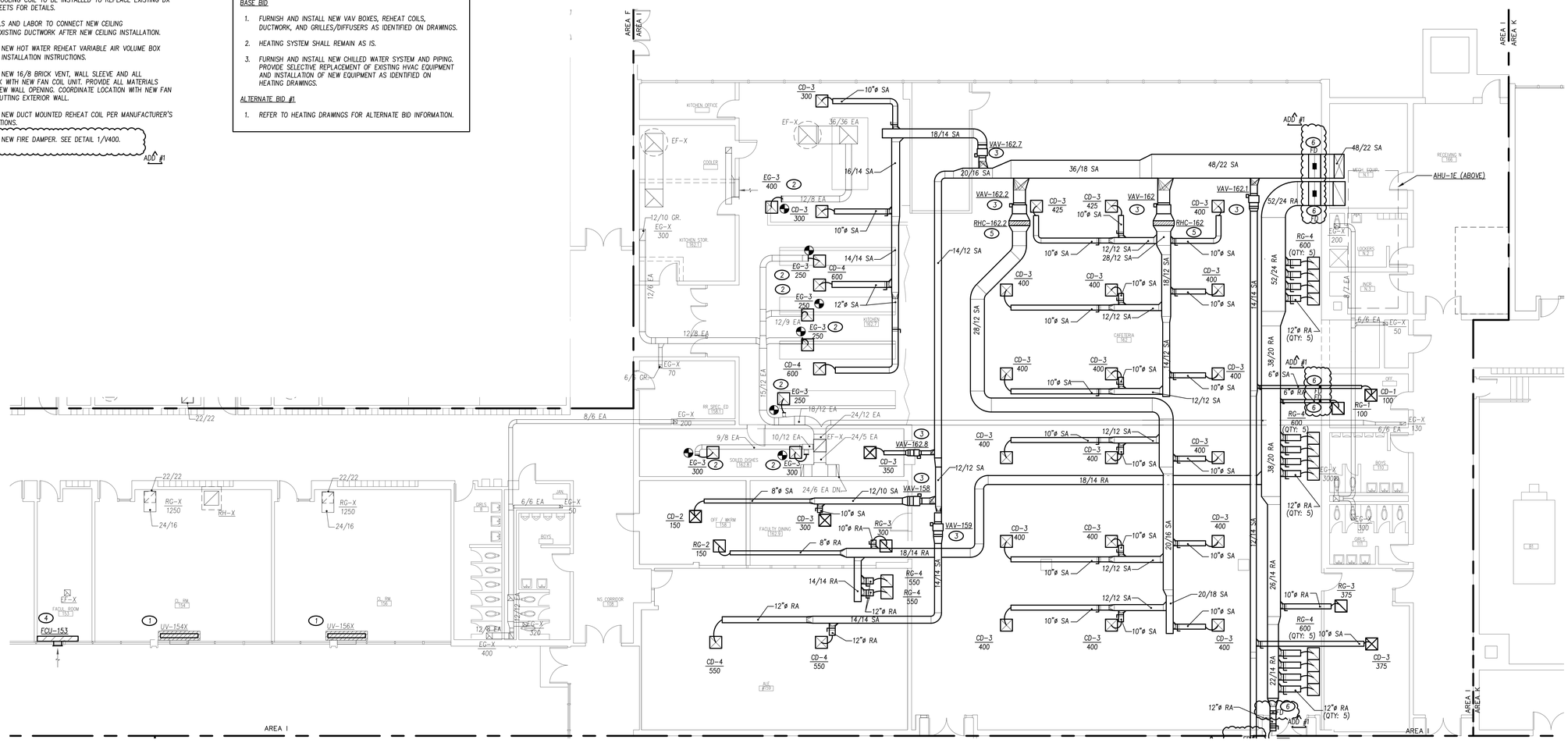

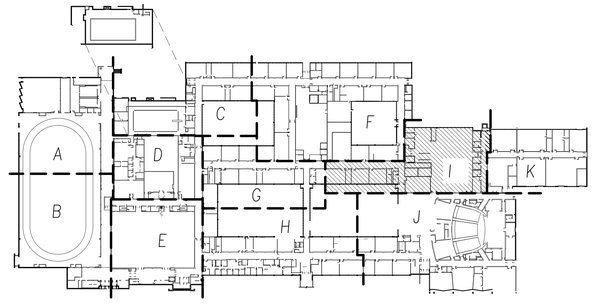

1 FIRST FLOOR PLAN - VENTILATING NEW WORK - AREA I
SCALE: 1/8" = 1'-0"

NORTH

KEY PLAN
SCALE: NOT TO SCALE

NORTH

REGISTERED PROFESSIONAL ENGINEER
RYAN C. REEF
062-056761
STATE OF ILLINOIS

DATE: 2/21/2022

KEITH Engineering Design
www.keithmep.com
707 SE Jefferson Ave
Peoria, IL 61603
309.808.4000 - office
309.714.4063 - fax

ROCKFORD PUBLIC SCHOOLS

FEHR GRAHAM
ENGINEERING & ENVIRONMENTAL
230 WOODLAWN AVENUE
AURORA, ILLINOIS 60506

Saavedra Group Architects
504 N. CHURCH STREET
ROCKFORD, ILLINOIS 61103

No.	Date	Revisions
1	3/17/2022	ADDENDUM 1

GUILFORD HIGH SCHOOL
HVAC UPGRADE
ROCKFORD, ILLINOIS

Sheet Title:
FIRST FLOOR PLAN - VENTILATING NEW WORK - AREA I

Proj. No.: 2251
Date: 02/21/2022
Drawn: GBW
Approved: RCR
Sheet No.: V111

GENERAL NOTES

BASE BID

1. FURNISH AND INSTALL NEW VAV BOXES, REHEAT COILS, DUCTWORK, AND GRILLES/DIFFUSERS AS IDENTIFIED ON DRAWINGS.
2. HEATING SYSTEM SHALL REMAIN AS IS.
3. FURNISH AND INSTALL NEW CHILLED WATER SYSTEM AND PIPING. PROVIDE SELECTIVE REPLACEMENT OF EXISTING HVAC EQUIPMENT AND INSTALLATION OF NEW EQUIPMENT AS IDENTIFIED ON HEATING DRAWINGS.

ALTERNATE BID #1

1. REFER TO HEATING DRAWINGS FOR ALTERNATE BID INFORMATION.

TEST AND BALANCE NOTE:

1. TEST AND BALANCE CONTRACTOR SHALL PROVIDE COMPREHENSIVE TESTING, ADJUSTING AND BALANCING OF ALL SUPPLY AND RETURN DIFFUSERS / GRILLES CONNECTED TO NEW AIR-HANDING UNITS.

VENTILATING NEW WORK KEYED NOTES:

(1) NEW CHILLED WATER COOLING COIL TO BE INSTALLED TO REPLACE EXISTING DX COIL. SEE HEATING SHEETS FOR DETAILS.

(2) FURNISH AND INSTALL NEW OUTDOOR AIR LOUVER AND OUTDOOR AIR WALL SLEEVE AND ALL ASSOCIATED DUCTWORK WITH NEW UNIT VENTILATOR. PROVIDE ALL MATERIALS AND LABOR TO CUT NEW WALL OPENING. COORDINATE LOCATION WITH NEW UNIT VENTILATOR INSTALLATION MANUAL AND HEATING DRAWINGS PRIOR TO CUTTING EXTERIOR WALL. ADD #1

(3) FURNISH AND INSTALL NEW FIRE DAMPER. SEE DETAIL 1/V400.

(4) FURNISH AND INSTALL NEW HOT WATER REHEAT VARIABLE AIR VOLUME BOX PER MANUFACTURER'S INSTALLATION INSTRUCTIONS.

(5) FURNISH AND INSTALL NEW FIRE DAMPER. SEE DETAIL 1/V400. ADD #1

1 FIRST FLOOR PLAN - VENTILATING NEW WORK - AREA J

SCALE: 1/8" = 1'-0"

NORTH

KEY PLAN

SCALE: NOT TO SCALE

NORTH

RYAN C. REEF 062-056761 LICENSED PROFESSIONAL ENGINEER STATE OF ILLINOIS EXPIRES: 30NOV23

DATE: 2/21/2022

KEITH Engineering Design
www.kedmep.com
707 NE Jefferson Ave Peoria, IL : 61603
309 / 938-4005 : office
309 / 214-0063 : fax

ROCKFORD PUBLIC SCHOOLS

FEHR GRAHAM ENGINEERING & ENVIRONMENTAL
230 WOODLAWN AVENUE AURORA, ILLINOIS 60506

Saavedra Group Architects
504 N CHURCH STREET ROCKFORD, ILLINOIS 61103

Revisions

No.	Date	
1	3/17/2022	ADDENDUM 1

GUILFORD HIGH SCHOOL
HVAC UPGRADE
ROCKFORD, ILLINOIS

Sheet Title: FIRST FLOOR PLAN - VENTILATING NEW WORK - AREA J

Proj. No.: 2251
Date: 02/21/2022
Drawn: GBW
Approved: RCR
Sheet No.: V11J

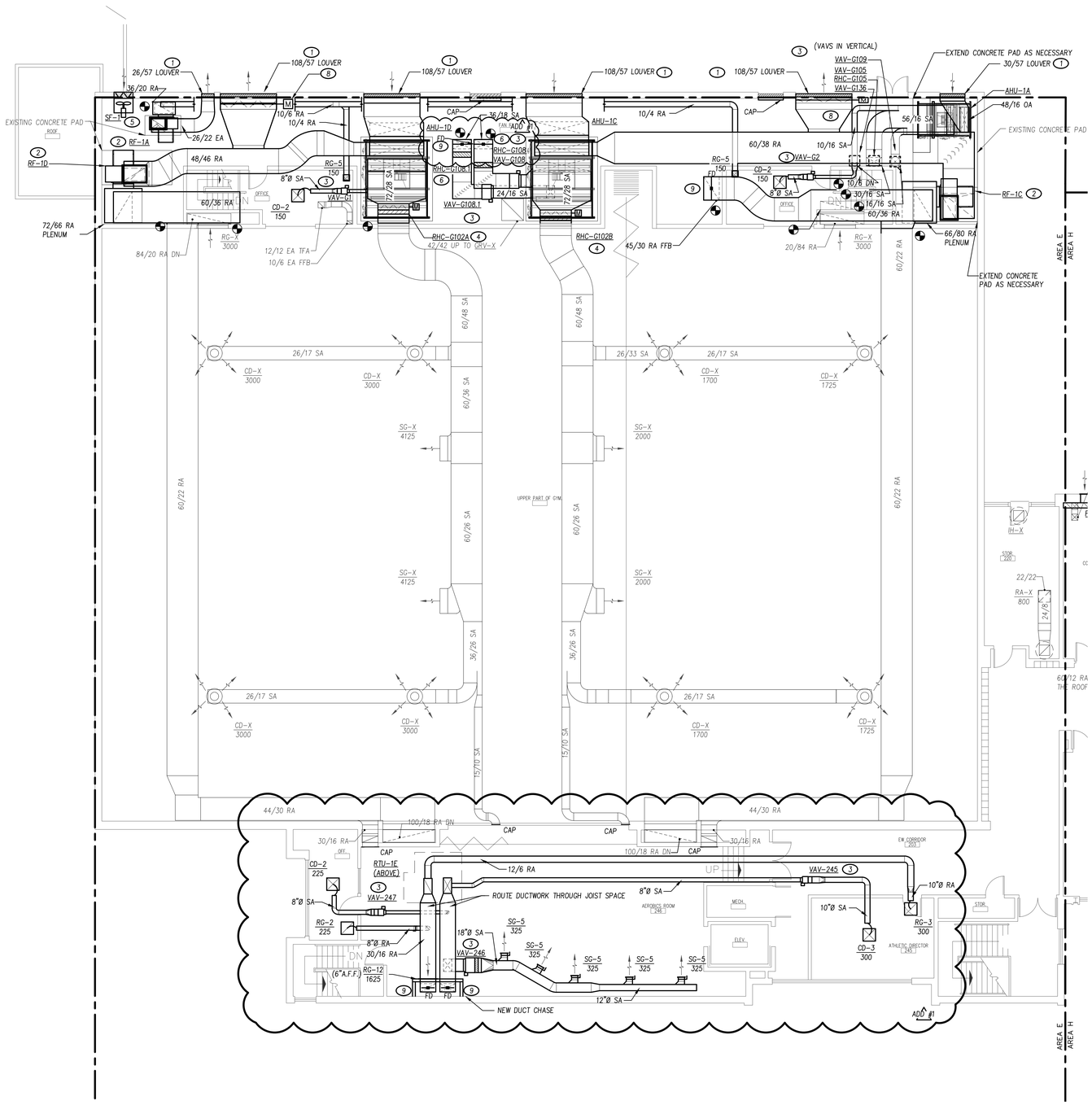

GENERAL NOTES

BASE BID

1. FURNISH AND INSTALL NEW AIR-HANDING UNITS, RETURN FANS, VAV BOXES, REHEAT COILS, LOUVERS, AND DUCTWORK AS IDENTIFIED ON DRAWINGS.
2. FURNISH AND INSTALL NEW CHILLED WATER SYSTEM AND PIPING AS IDENTIFIED ON HEATING DRAWINGS.
3. PROVIDE INSTALLATION OF NEW HVAC EQUIPMENT AS IDENTIFIED ON DRAWNGS.

ALTERNATE BID #1

1. REFER TO HEATING DRAWINGS FOR ALTERNATE BID INFORMATION.

TEST AND BALANCE NOTE:

1. TEST AND BALANCE CONTRACTOR SHALL PROVIDE COMPREHENSIVE TESTING, ADJUSTING AND BALANCING OF ALL SUPPLY AND RETURN DIFFUSERS / GRILLES CONNECTED TO NEW AIR-HANDING UNITS.

VENTILATING NEW WORK KEYED NOTES:

1. FURNISH AND INSTALL NEW OUTDOOR OR EXHAUST AIR STATIONARY LOUVER AS INDICATED ON DRAWINGS IN EXISTING WALL OPENING PER DETAIL 2/V400.
2. FURNISH AND INSTALL NEW RETURN FAN PER MANUFACTURER'S INSTALLATION INSTRUCTIONS ON EXISTING CONCRETE EQUIPMENT PAD.
3. FURNISH AND INSTALL NEW VARIABLE AIR VOLUME BOX WITH INTEGRAL HOT WATER REHEAT COIL PER MANUFACTURER'S INSTALLATION INSTRUCTIONS.
4. FURNISH AND INSTALL NEW MOTORIZED DAMPER AND DUCT-MOUNTED HOT WATER REHEAT COIL.
5. FURNISH AND INSTALL NEW WALL MOUNTED SUPPLY FAN PER MANUFACTURER'S INSTALLATION INSTRUCTIONS. SEE DETAIL 5/V400.
6. FURNISH AND INSTALL NEW DUCT MOUNTED HOT WATER REHEAT COIL PER MANUFACTURER'S INSTALLATION INSTRUCTIONS.
7. FURNISH AND INSTALL NEW 16/8 BRICK VENT, WALL SLEEVE AND ALL ASSOCIATED DUCTWORK WITH NEW FAN COIL UNIT. PROVIDE ALL MATERIALS AND LABOR TO CUT NEW WALL OPENING. COORDINATE LOCATION WITH NEW FAN COIL UNIT PRIOR TO CUTTING EXTERIOR WALL.
8. FURNISH AND INSTALL NEW MOTORIZED DAMPER.
9. FURNISH AND INSTALL NEW FIRE DAMPER. SEE DETAIL 1/V400.

ADD #1

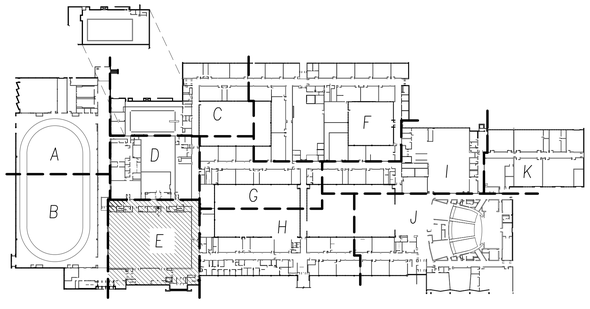

1 SECOND FLOOR PLAN - VENTILATING NEW WORK - AREA E
SCALE: 1/8" = 1'-0"

NORTH

KEY PLAN
SCALE: NOT TO SCALE

NORTH

STATE OF ILLINOIS REGISTERED PROFESSIONAL ENGINEER
BRYAN R. CRAIG
REG. NO. 062-056761
MY REGISTRATION EXPIRES: NOVEMBER 30, 2023

DATE: 2/21/2022

KEITH Engineering Design
www.keithmep.com
707 SE Jefferson Ave. Suite 1A
Peoria, IL 61603
309.808.4000 - office
309.214.4063 - fax

ROCKFORD PUBLIC SCHOOLS

FEHR GRAHAM
ENGINEERING & ENVIRONMENTAL
230 WOOLMAN AVENUE
AURORA, ILLINOIS 60506

Saavedra Group Architects
504 N. CHURCH STREET
ROCKFORD, ILLINOIS 61103

No.	Date	Revisions
1	03/09/2022	ADDENDUM 01

GUILFORD HIGH SCHOOL
HVAC UPGRADE
ROCKFORD, ILLINOIS

Sheet Title:
SECOND FLOOR PLAN
VENTILATING
NEW WORK - AREA E

Proj. No.:	2251
Date:	02/21/2022
Drawn:	GBW
Approved:	RCR
Sheet No.:	V12E

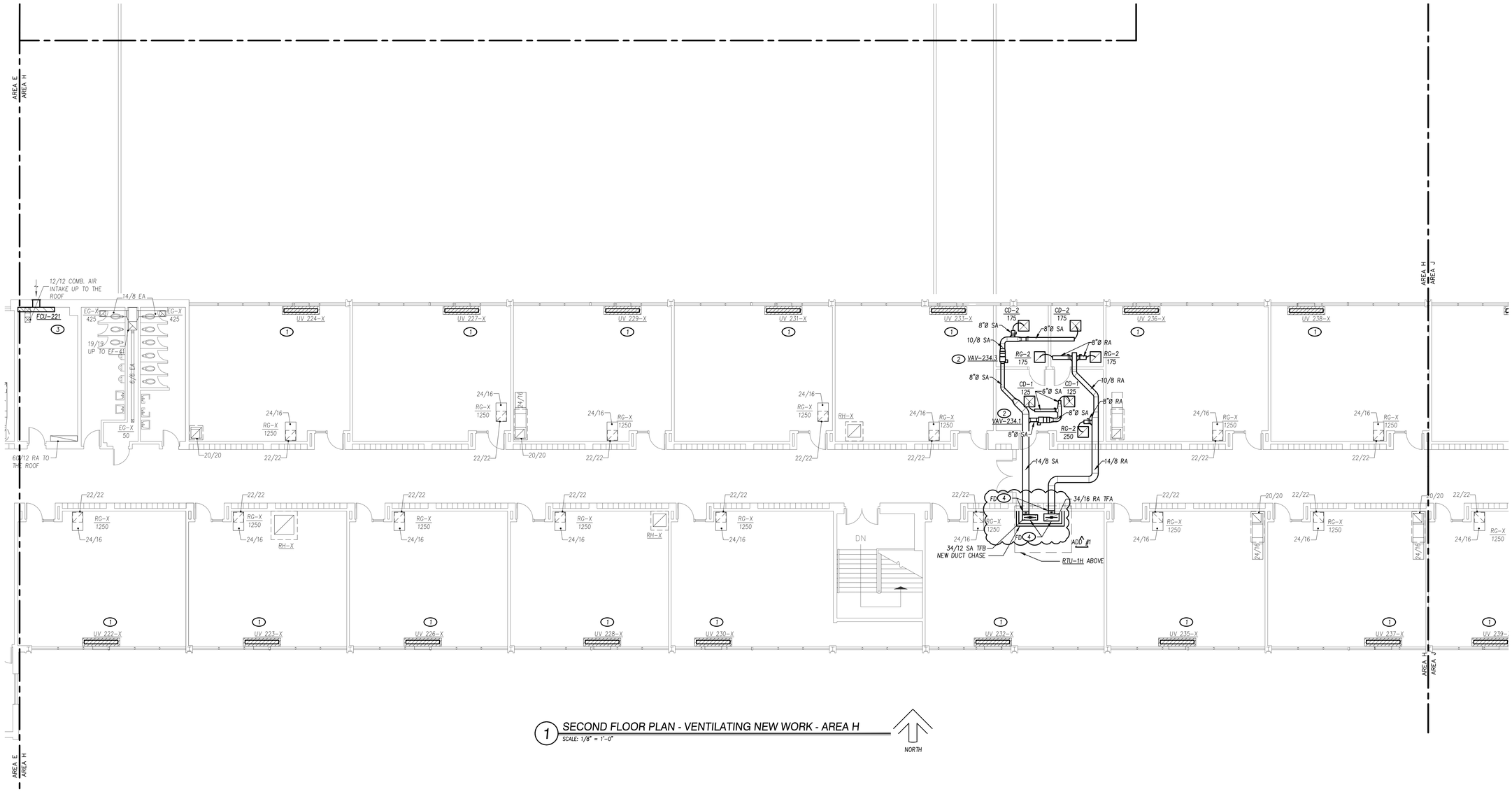

1 SECOND FLOOR PLAN - VENTILATING NEW WORK - AREA H
SCALE: 1/8" = 1'-0"
NORTH

GENERAL NOTES

BASE BID

1. REPLACE EXISTING UNIT VENTILATOR DX COOLING COIL WITH CHILLED WATER COIL AS INDICATED.
2. FURNISH AND INSTALL NEW VAV BOXES, DUCTWORK AND ALL GRILLES/DIFFUSERS AS INDICATED.

ALTERNATE BID #1

1. REFER TO HEATING DRAWINGS FOR ALTERNATE BID INFORMATION.

VENTILATING NEW WORK KEYED NOTES:

1. EXISTING DX COOLING COIL TO BE REMOVED AND REPLACED WITH CHILLED WATER COIL. SEE HEATING SHEETS FOR DETAILS.
2. FURNISH AND INSTALL NEW VARIABLE-AIR VOLUME BOX W/ INTEGRAL HOT WATER REHEAT COIL PER MANUFACTURER'S INSTALLATION INSTRUCTIONS.
3. FURNISH AND INSTALL NEW 16/8 BRICK VENT, WALL SLEEVE AND ALL ASSOCIATED DUCTWORK WITH NEW FAN COIL UNIT. PROVIDE ALL MATERIALS AND LABOR TO CUT NEW WALL OPENING. COORDINATE LOCATION WITH NEW FAN COIL UNIT PRIOR TO CUTTING EXTERIOR WALL.
4. FURNISH AND INSTALL NEW FIRE DAMPER. SEE DETAIL 1/V400.

ADD #1

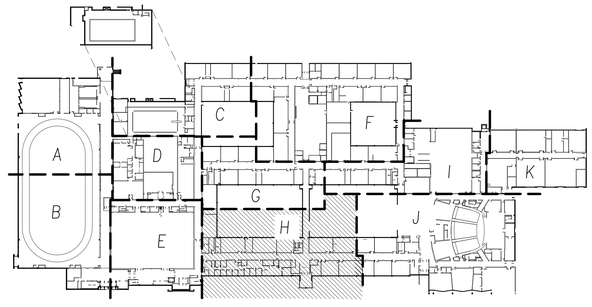

KEY PLAN
SCALE: NOT TO SCALE
NORTH

DATE: 2/21/2022

KEITH Engineering Design
www.keitheng.com
707 NE Jefferson Ave
Peoria, IL 61603
309 / 688-4005 : office
309 / 214-0063 : fax

ROCKFORD PUBLIC SCHOOLS
Saavedra Group Architects
504 N CHURCH STREET
ROCKFORD, ILLINOIS 61103

FEHR GRAHAM
ENGINEERING & ENVIRONMENTAL
230 WOODLAWN AVENUE
AURORA, ILLINOIS 60506

Revisions

No.	Date	
1	3/17/2022	ADDENDUM 1

GUILFORD HIGH SCHOOL
HVAC UPGRADE
ROCKFORD, ILLINOIS

Sheet Title: SECOND FLOOR PLAN - VENTILATING NEW WORK - AREA H

Proj. No.: 2251
Date: 02/21/2022
Drawn: GBW
Approved: RCR
Sheet No.: V12H

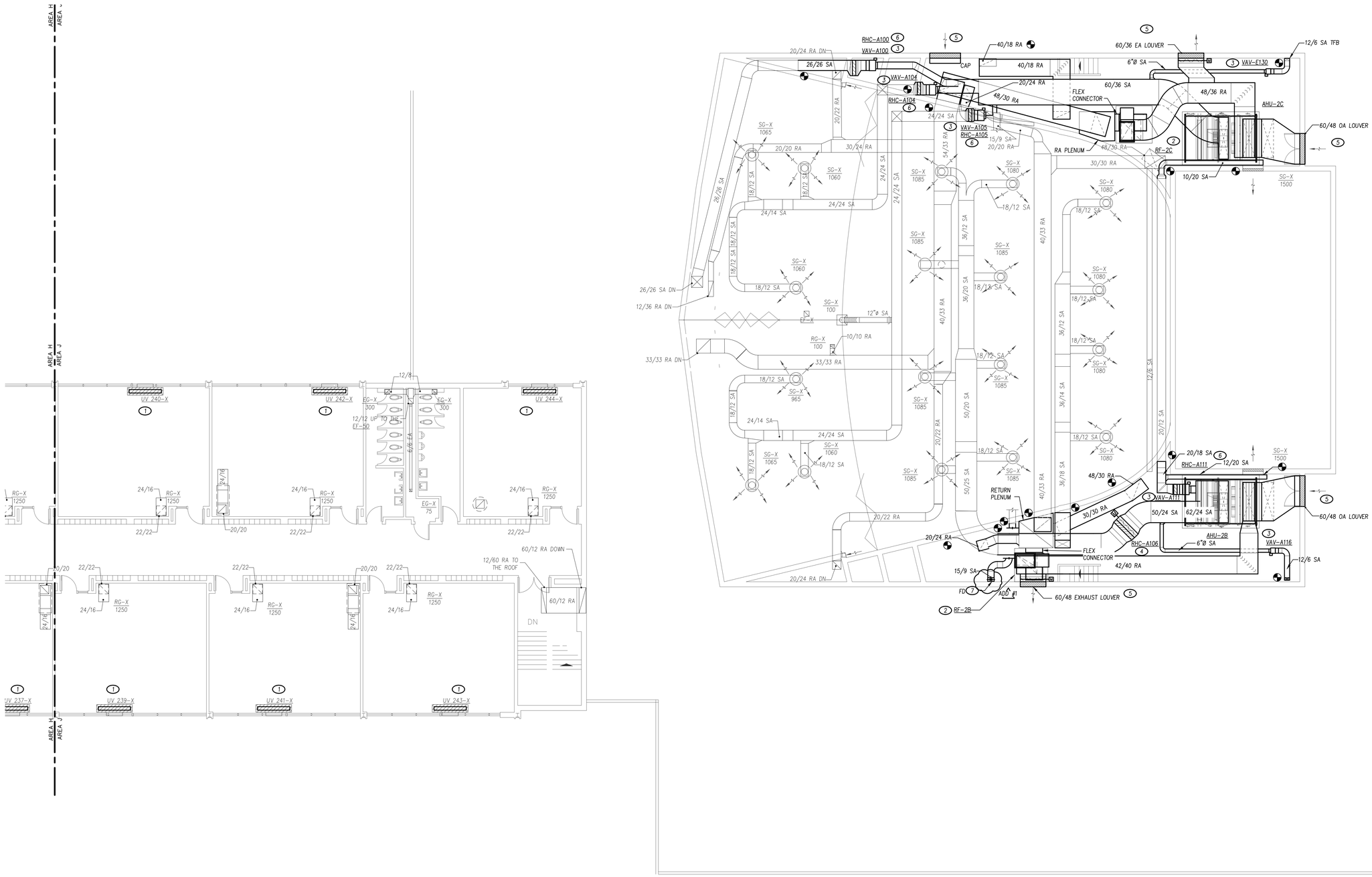

GENERAL NOTES

BASE BID

1. FURNISH AND INSTALL NEW AIR-HANDING UNITS, RETURN FANS, VAV BOXES, REHEAT COILS, LOUVERS, AND DUCTWORK AS IDENTIFIED ON DRAWINGS.
2. FURNISH AND INSTALL NEW CHILLED WATER SYSTEM AND PIPING AS IDENTIFIED ON HEATING DRAWINGS.
3. REPLACE EXISTING UNIT VENTILATOR DX COOLING COIL WITH CHILLED WATER COIL AS INDICATED

ALTERNATE BID #1

1. REFER TO HEATING DRAWINGS FOR ALTERNATE BID INFORMATION.

TEST AND BALANCE NOTE:

1. TEST AND BALANCE CONTRACTOR SHALL PROVIDE COMPREHENSIVE TESTING, ADJUSTING AND BALANCING OF ALL SUPPLY AND RETURN DIFFUSERS / GRILLES CONNECTED TO NEW AIR-HANDING UNITS.

VENTILATING NEW WORK KEYED NOTES:

1. EXISTING DX COOLING COIL TO BE REMOVED AND REPLACED WITH CHILLED WATER COIL. SEE HEATING SHEETS FOR DETAILS
2. FURNISH AND INSTALL NEW RETURN FAN PER MANUFACTURER'S INSTALLATION INSTRUCTIONS ON 4" CONCRETE EQUIPMENT PAD.
3. FURNISH AND INSTALL NEW HOT WATER REHEAT VARIABLE AIR VOLUME BOX PER MANUFACTURER'S INSTALLATION INSTRUCTIONS. COORDINATE EXACT LOCATION WITH EXISTING STRUCTURE.
4. FURNISH AND INSTALL NEW MOTORIZED DAMPER AND DUCT MOUNTED HOT WATER REHEAT COIL.
5. FURNISH AND INSTALL NEW OUTDOOR OR EXHAUST AIR STATIONARY LOUVER AS INDICATED ON DRAWINGS IN EXISTING WALL OPENING PER DETAIL 2/V400.
6. FURNISH AND INSTALL NEW DUCT MOUNTED HOT WATER REHEAT COIL PER MANUFACTURER'S INSTALLATION INSTRUCTIONS. COORDINATE EXACT LOCATION WITH EXISTING STRUCTURE.
7. FURNISH AND INSTALL NEW FIRE DAMPER. SEE DETAIL 1/V400.

ADD #1

1 SECOND FLOOR PLAN - VENTILATING NEW WORK - AREA J
SCALE: 1/8" = 1'-0"

NORTH

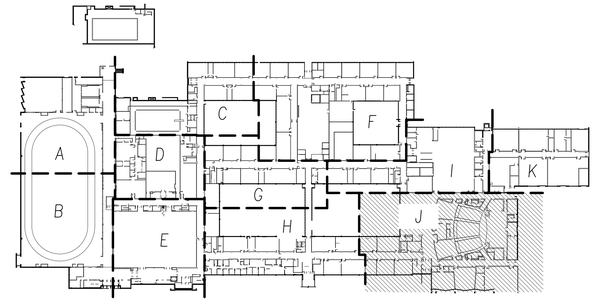

KEY PLAN
SCALE: NOT TO SCALE

NORTH

DATE: 2/21/2022

KEITH Engineering Design
www.keithmep.com
707 NE Jefferson Ave
Peoria, IL 61603
309 / 698-4005 : office
309 / 214-0063 : fax

ROCKFORD PUBLIC SCHOOLS
FEHR GRAHAM ENGINEERING & ENVIRONMENTAL
230 WOODLAWN AVENUE
AURORA, ILLINOIS 60506
Saavedra Group Architects
504 N CHURCH STREET
ROCKFORD, ILLINOIS 61103

No.	Date	Revisions
1	3/17/2022	ADDENDUM 1

GUILFORD HIGH SCHOOL
HVAC UPGRADE
ROCKFORD, ILLINOIS

Sheet Title: SECOND FLOOR PLAN - VENTILATING NEW WORK - AREA J

Proj. No.: 2251
Date: 02/21/2022
Drawn: GBW
Approved: RCR
Sheet No.: V12J

DUCT MOUNTED REHEAT COIL SCHEDULE

TAG	DESIGN BASIS MAKE	DESIGN BASIS MODEL / SERIES	AREA SERVED	COOLING AIRFLOW (CFM)	HEATING AIRFLOW CFM	NO. OF COILS	COIL HEIGHT (IN)	FINNED LENGTH (IN)	EWT F	LWT F	FLUID GPM	FLUID TYPE	ROWS	FIN SPACING FPI	EAT F	LAT F	APD IN. W.C.	FLUID PD ft H2O	CAPACITY MBH	REMARKS
RHC-1A	COILMASTER	HWC02	FIELDHOUSE	16,000	8,000	1	48"	64"	160	120	18.12	WATER	2	10.0	55	75	0.18	17.74	363.9	ALT. BID #3
RHC-1B	COILMASTER	HWC02	FIELDHOUSE	16,000	8,000	1	48"	64"	160	120	18.12	WATER	2	10.0	55	75	0.18	17.74	363.9	ALT. BID #3
RHC-2A	COILMASTER	HWC02	FIELDHOUSE	16,000	8,000	1	48"	64"	160	120	18.12	WATER	2	10.0	55	75	0.18	17.74	363.9	ALT. BID #3
RHC-3A	COILMASTER	HWC02	FIELDHOUSE	16,000	8,000	1	48"	64"	160	120	18.12	WATER	2	10.0	55	75	0.18	17.74	363.9	ALT. BID #3
RHC-3B	COILMASTER	HWC02	FIELDHOUSE	16,000	8,000	1	48"	64"	160	120	18.12	WATER	2	10.0	55	75	0.18	17.74	363.9	ALT. BID #3
RHC-4A	COILMASTER	HWC02	FIELDHOUSE	16,000	8,000	1	48"	64"	160	120	18.12	WATER	2	10.0	55	75	0.18	17.74	363.9	ALT. BID #3
RHC-G102A	COILMASTER	HWC02	GYMNASIUM - EAST	21,000	10,500	1	56"	60"	160	120	36.5	WATER	2	9.0	55	85	0.45	13.97	726.8	
RHC-G102B	COILMASTER	HWC02	GYMNASIUM - WEST	11,600	5,800	1	48"	60"	160	120	21.22	WATER	2	7.0	55	85	0.19	12.16	580.0	
RHC-G108	COILMASTER	HWC02	WRESTLING ROOM	4,700	2,350	1	24"	36"	160	120	7.66	WATER	2	8.1	55	85	0.22	0.45	152.9	
RHC-G108.1	COILMASTER	HWC02	AEROBICS ROOM	4,700	2,350	1	24"	36"	160	120	7.66	WATER	2	8.1	55	85	0.22	0.45	152.9	
RHC-G105	COILMASTER	HWC02	BOYS LOCKER ROOM	3,200	1,600	1	24"	30"	160	120	5.21	WATER	2	8.8	55	85	0.219	0.38	104.1	
RHC-162	COILMASTER	HWC02	CAFETERIA NORTH	3,625	1,813	1	18"	42"	160	120	7.87	WATER	2	10.2	55	95	0.27	3.97	157.3	
RHC-162.2	COILMASTER	HWC02	CAFETERIA SOUTH	3,625	1,813	1	18"	42"	160	120	7.87	WATER	2	10.2	55	95	0.27	3.97	157.3	
RHC-A1	COILMASTER	HWC02	POOL - MAIN AREA	5,600	2,800	1	30"	36"	160	120	9.12	WATER	2	9.1	55	85	0.244	0.43	182.2	ALT. BID #2
RHC-A2	COILMASTER	HWC02	POOL - TEAM ROOM	1,700	850	1	18"	20"	160	120	3.69	WATER	2	10.2	55	95	0.27	4.15	73.8	ALT. BID #2
RHC-A3	COILMASTER	HWC02	POOL - OFFICES	420	210	1	12"	12"	160	120	1	WATER	2	9.2	55	95	0.11	1.13	20.0	ALT. BID #2
RHC-A4	COILMASTER	HWC02	POOL - STORAGE	100	100	1	12"	12"	160	120	1	WATER	1	9.2	55	95	0.11	1.13	12.0	ALT. BID #2
RHC-A100	COILMASTER	HWC02	COMMONS	5,300	3,000	1	30"	36"	160	120	8.96	WATER	2	8.7	55	85	0.295	0.42	178.9	
RHC-A104	COILMASTER	HWC02	DRAMA CR	3,195	1,598	1	24"	30"	160	120	5.21	WATER	2	8.8	55	85	0.219	0.38	104.1	
RHC-A105	COILMASTER	HWC02	DRAMA CR	3,190	1,595	1	24"	30"	160	120	5.21	WATER	2	8.8	55	85	0.219	0.38	104.1	
RHC-A106	COILMASTER	HWC02	AUDITORIUM	13,000	6,500	1	36"	60"	160	120	21.56	WATER	2	8.0	55	85	0.4	10.61	423.5	
RHC-A111	COILMASTER	HWC02	STAGE	3,000	1,500	1	24"	24"	160	120	4.89	WATER	2	7.3	55	85	0.25	4.02	97.6	

NOTES:

1. MECHANICAL CONTRACTOR TO VERIFY LH / RH PIPING CONFIGURATION PRIOR TO PURCHASE.

VAV TERMINAL UNIT SCHEDULE

UNIT TAG	DESIGN BASIS MAKE	DESIGN BASIS MODEL	LOCATION	PRIMARY INLET (IN)	DESIGN COOLING AIRFLOW (CFM)	MINIMUM COOLING AIRFLOW (CFM)	MAX APD @ COOLING AIRFLOW (IN W.C.)	COOLING INLET VELOCITY (FPM)	HEATING AIRFLOW (CFM)	PRIMARY EDB (DEG F)	COIL HEATING CAPACITY (MBH)	HEATING COIL (EWT)	HEATING COIL (LWT)	COIL FLOW RATE (GPM)	ROWS (QTY)	FLUID TYPE	DISCHARGE VALVE (NC)	RADIATED VALVE (NC)	REMARKS
VAV-AD101	TRANE	VCWF	FRONT OFFICE	8	325	105	0.14	931	275	55	11.93	160	129	0.76	2	WATER	12	12	
VAV-AD101.2	TRANE	VCWF	FRONT OFFICE	8	400	120	0.2	1,146	300	55	13.01	160	129	0.76	2	WATER	15	15	
VAV-AD102	TRANE	VCWF	FRONT OFFICE	6	200	75	0.11	1,467	150	55	8.72	160	125	0.5	2	WATER	19	15	
VAV-AD105	TRANE	VCWF	FRONT OFFICE	8	600	180	0.18	1,100	450	55	21.65	160	120	1	2	WATER	15	15	
VAV-AD106	TRANE	VCWF	FRONT OFFICE	8	350	105	0.16	1,003	300	55	13.01	160	130	0.85	2	WATER	16	16	
VAV-AD110	TRANE	VCWF	FRONT OFFICE	6	200	75	0.11	1,467	150	55	8.72	160	126	0.5	2	WATER	19	15	
VAV-AD111	TRANE	VCWF	FRONT OFFICE	10	625	187.5	0.19	1,146	400	55	19.96	160	120	1	2	WATER	15	15	
VAV-AD114	TRANE	VCWF	FRONT OFFICE	8	350	105	0.16	1,003	300	55	13.01	160	130	0.85	2	WATER	15	15	
VAV-AD119	TRANE	VCWF	FRONT OFFICE	10	650	195	0.21	1,192	400	55	19.96	160	120	1	2	WATER	15	15	
VAV-AD120	TRANE	VCWF	FRONT OFFICE	12	800	240	0.16	1,019	600	55	25.75	160	120	0.91	2	WATER	14	14	
VAV-AD122	TRANE	VCWF	FRONT OFFICE	8	475	142.5	0.25	1,361	350	55	15.18	160	130	1.04	2	WATER	18	18	
VAV-102	TRANE	VCWF	BAND OFFICE	12	825	247.5	0.16	1,100	600	55	26	160	120	1	2	WATER	15	15	
VAV-105.1	TRANE	VCWF	OFFICE	12	800	240	0.16	1,019	600	55	25.75	160	120	0.91	2	WATER	14	14	
VAV-116	TRANE	VCWF	OFFICE	6	300	105	0.26	1,528	225	55	10.31	160	120	0.5	2	WATER	15	12	
VAV-119.1	TRANE	VCWF	ART WKRM	6	300	105	0.26	1,528	225	55	10.31	160	120	0.5	2	WATER	15	12	
VAV-158	TRANE	VCWF	FACULTY DINING	8	450	135	0.24	1,289	325	55	14.1	160	130	0.94	2	WATER	14	14	
VAV-159	TRANE	VCWF	ALE	12	1,100	330	0.26	1,401	850	55	36.87	160	125	2.08	2	WATER	16	17	
VAV-162	TRANE	VCCF	CAFETERIA	24x16	3,625	1087.5	0.07	1,359	COOLING ONLY								26	25	
VAV-162.1	TRANE	VCWF	CAFETERIA	12	1,075	322.5	0.25	1,369	750	55	32.53	160	122	1.74	2	WATER	15	14	
VAV-162.2	TRANE	VCCF	CAFETERIA	24x16	3,625	1087.5	0.07	1,359	COOLING ONLY								26	25	
VAV-162.7	TRANE	VCWF	KITCHEN	16	1,800	540	0.24	1,289	1500	55	65.07	160	120	3.17	2	WATER	18	17	
VAV-162.8	TRANE	VCWF	SOILED DISHES	8	350	105	0.16	1,003	250	55	10.86	160	128	0.68	2	WATER	18	16	
VAV-234.1	TRANE	VCWF	2ND FLOOR OFFICE	6	250	100	0.19	1,273	175	55	9.34	160	123	0.5	2	WATER	16	12	
VAV-234.3	TRANE	VCWF	2ND FLOOR OFFICE	8	350	105	0.16	1,003	250	55	10.85	160	128	0.68	2	WATER	12	12	
VAV-G1	TRANE	VCWF	GYM MEZ OFFICE	6	200	75	0.11	1,467	100	55	8.72	160	126	0.5	2	WATER	19	15	
VAV-G2	TRANE	VCWF	GYM MEZ OFFICE	6	200	75	0.11	1,467	100	55	8.72	160	126	0.5	2	WATER	19	15	
VAV-G105	TRANE	VCWF	BOYS LR	24x16	3,200	960	0.2	1,200	COOLING ONLY								25	25	
VAV-G108	TRANE	VCWF	AEROBIC / WREST.	24x16	4,700	1410	0.12	1,762	COOLING ONLY								26	25	
VAV-G108.1	TRANE	VCWF	WRESTLING RM	24x16	4,700	1410	0.12	1,762	COOLING ONLY								26	25	
VAV-G109	TRANE	VCWF	GIRLS LR	16	1,800	540	0.24	1,289	1500	55	65.07	160	120	3.17	2	WATER	18	17	
VAV-G136	TRANE	VCWF	GYM OFFICE	8	300	105	0.16	1,003	300	55	13.01	160	130	0.85	2	WATER	15	15	
VAV-A100	TRANE	VCWF	COMMONS	24x16	5,300	1590	0.15	1995	COOLING ONLY								25	25	
VAV-A104	TRANE	VCWF	DRAMA CR	24x16	3,195	958.5	0.2	1,200	COOLING ONLY								26	25	
VAV-A105	TRANE	VCWF	DRAMA CR	24x16	3,190	957	0.2	1,200	COOLING ONLY								26	25	
VAV-A111	TRANE	VCWF	STAGE	24x16	3,000	900	0.2	1,200	COOLING ONLY								25	25	
VAV-A116	TRANE	VCWF	AUD. BOYS DRESS	6	300	105	0.26	1,528	225	55	10.31	160	120	0.5	2	WATER	15	12	
VAV-E130	TRANE	VCWF	AUD. WING SPACE	6	300	105	0.26	1,528	225	55	10.31	160	120	0.5	2	WATER	15	12	
VAV-G100	TRANE	VCWF	GYM. LOBBY	16	2,000	600	0.29	1,432	1400	55	63.59	160	120	3.18	2	WATER	12	12	
VAV-245	TRANE	VCWF	ATHLETIC DIRECT.	8	300	90	0.14	931	275	55	11.93	160	129	0.76	2	WATER	12	12	
VAV-246	TRANE	VCWF	WEIGHT ROOM	14	1,475	442.5	0.24	1,380	1000	55	44.1	160	120	2.21	2	WATER	15	15	
VAV-247	TRANE	VCWF	OFFICE	6	225	67.5	0.19	1,273	175	55	9.34	160	123	0.5	2	WATER	16	12	

NOTES:

1. MECHANICAL CONTRACTOR TO VERIFY LH / RH PIPING CONFIGURATION PRIOR TO PURCHASE.

ADD #1

RETURN FAN SCHEDULE

MARK	DESIGN BASIS MAKE	DESIGN BASIS MODEL	LOCATION	DESCRIPTION	DRIVE	PERFORMANCE AIRFLOW (CFM)	PERFORMANCE E.S.P. (IN. H2O)	PERFORMANCE R.P.M.	MOTOR BHP	MOTOR HP	MOTOR VOLTS	MOTOR PHASE	REMARKS
RF-1A	COOK	195 CF-SWSI	GYMNASIUM MECHANICAL ROOM	FLOOR MOUNTED UTILITY SET	DIRECT	5,300	2	1,725	2.62	5	480	3	SEE NOTES
RF-1C	COOK	365 CF-SWSI	GYMNASIUM MECHANICAL ROOM	FLOOR MOUNTED UTILITY SET	DIRECT	21,000	2	1,725	12.10	15	480	3	SEE NOTES
RF-1D	COOK	365 CF-SWSI	GYMNASIUM MECHANICAL ROOM	FLOOR MOUNTED UTILITY SET	DIRECT	21,000	2	1,725	12.10	15	480	3	SEE NOTES
RF-2B	COOK	365 CF-SWSI	AUDITORIUM MECHANICAL ROOM	FLOOR MOUNTED UTILITY SET	DIRECT	16,600	2	1,725	7.70	10	480	3	SEE NOTES
RF-2C	COOK	330 CF-SWSI	AUDITORIUM MECHANICAL ROOM	FLOOR MOUNTED UTILITY SET	DIRECT	13,450	2	1,725	7.55	10	480	3	SEE NOTES

NOTES:

1. PROVIDE MOTORIZED ISOLATION DAMPER.
2. PROVIDE FACTORY MOUNTED DISCONNECT SWITCH
3. VFD TO BE PROVIDED BY ELECTRICAL CONTRACTOR.

SUPPLY FAN SCHEDULE

MARK	DESIGN BASIS MAKE	DESIGN BASIS MODEL	LOCATION	DESCRIPTION	DRIVE	PERFORMANCE AIRFLOW (CFM)	PERFORMANCE E.S.P. (IN. H2O)	PERFORMANCE R.P.M.	HP	VOLTS	PHASE	REMARKS
SF-1	COOK	24XWD	GYMNASIUM MECHANICAL ROOM	PROPELLER SUPPLY FAN	DIRECT	3,600	0.25	1,080	3/4	480	3	SEE NOTES

NOTES:

1. PROVIDE MOTORIZED ISOLATION DAMPER.
2. PROVIDE FACTORY MOUNTED DISCONNECT SWITCH
3. PROVIDE FAN SPEED CONTROL.
4. PROVIDE OSHA MOTOR SIDE GUARD.

GRAVITY ROOF HOOD SCHEDULE

MARK	DESIGN BASIS MAKE	DESIGN BASIS MODEL	LOCATION	DESCRIPTION	THROAT SIZE	PERFORMANCE AIRFLOW (CFM)	PERFORMANCE THROAT VELOCITY (FPM)	PERFORMANCE HOOD VELOCITY (FPM)	PERFORMANCE E.S.P. (IN. H2O)	REMARKS
GRV-171	COOK	GI	TECH. WING ROOF	DUCTED INTAKE VENTILATOR	12 / 12	900	600	164	0.017	SEE NOTE 2
GRV-3D	COOK	GR	BAND / CHOIR ROOF	DUCTED EXHAUST VENTILATOR	18 / 42	3,000	528	616	0.041	SEE NOTE 2
GRV-3E	COOK	GR	FIRST FLOOR ROOF	DUCTED EXHAUST VENTILATOR	30 / 42	6,000	704	880	0.099	SEE NOTE 2
GRV-P200	COOK	GR	PENTHOUSE	DUCTED EXHAUST VENTILATOR	42 / 48	12,000	857	857	0.137	SEE NOTE 1

NOTES:

1. PROVIDED INSULATED ROOF CURB AND BIRD SCREEN
2. PROVIDED ROOF CURB ADAPTER AND BIRD SCREEN.

LICENSED PROFESSIONAL ENGINEER
RYAN C. REEF
062-056761
EXPIRES: 30NOV23
STATE OF ILLINOIS
DATE: 2/21/2022

KEITH Engineering Design
www.kedmep.com
707 NE Jefferson Ave
Peoria, IL : 61603
309 / 938-4005 : office
309 / 214-0063 : fax

ROCKFORD PUBLIC SCHOOLS

FEHR GRAHAM
ENGINEERING & ENVIRONMENTAL
230 WOODLAWN AVENUE
AURORA, ILLINOIS 60506

Saavedra Group Architects
504 N CHURCH STREET
ROCKFORD, ILLINOIS 61103

Revisions

No.	Date	
1	3/17/2022	ADDENDUM 1

GUILFORD HIGH SCHOOL
HVAC UPGRADE

ROCKFORD, ILLINOIS

Sheet Title: VENTILATING SCHEDULES

Proj. No.: 2251
Date: 02/21/2022
Drawn: GBW
Approved: RCR
Sheet No.: V500

EXHAUST FAN SCHEDULE

MARK	DESIGN BASIS		LOCATION	DESCRIPTION	DRIVE	PERFORMANCE			MOTOR			REMARKS
	MAKE	MODEL				AIRFLOW (CFM)	E.S.P. (IN. H20)	R.P.M.	HP	VOLTS	PHASE	
EF-1	COOK	ACED/120C13D	ROOF-AREA K	CENTRIFUGAL ROOF EXHAUST FAN	DIRECT	700	0.5	1,113	1/4	115	1	SEE NOTES
EF-3	COOK	ACED/150C13D	ROOF-AREA K	CENTRIFUGAL ROOF EXHAUST FAN	DIRECT	1,500	0.5	985	3/4	115	1	SEE NOTES
EF-9	COOK	ACED / 100	ROOF-AREA I	CENTRIFUGAL ROOF EXHAUST FAN	DIRECT	850	0.5	980	1/2	115	1	SEE NOTES
EF-19	COOK	ACED/100C15DM	ROOF-AREA I	CENTRIFUGAL ROOF EXHAUST FAN	DIRECT	250	0.5	1,480	1/8	115	1	SEE NOTES
EF-22	COOK	ACED/101C15D	ROOF-AREA C	CENTRIFUGAL ROOF EXHAUST FAN	DIRECT	500	0.5	1,550	1/8	115	1	SEE NOTES
EF-25	COOK	ACED/135C15D	ROOF-AREA F	CENTRIFUGAL ROOF EXHAUST FAN	DIRECT	700	0.5	967	1/8	115	1	SEE NOTES
EF-27	COOK	ACED/120C15D	ROOF-AREA F	CENTRIFUGAL ROOF EXHAUST FAN	DIRECT	1,200	0.5	1,550	1/4	115	1	SEE NOTES
EF-37	COOK	ACED/100C15DM	ROOF-AREA H	CENTRIFUGAL ROOF EXHAUST FAN	DIRECT	200	0.5	1,462	1/8	115	1	SEE NOTES
EF-41	COOK	ACED/10115D	ROOF-AREA H	CENTRIFUGAL ROOF EXHAUST FAN	DIRECT	550	0.5	1,451	1/8	115	1	SEE NOTES
EF-45	COOK	ACED/150C15D	ROOF-AREA H	CENTRIFUGAL ROOF EXHAUST FAN	DIRECT	2,325	0.5	1,386	3/4	115	1	SEE NOTES
EF-50	COOK	ACED/100C15DM	ROOF-AREA J	CENTRIFUGAL ROOF EXHAUST FAN	DIRECT	200	0.5	1,462	1/8	115	1	SEE NOTES
EF-51	COOK	ACED/100C15DM	ROOF-AREA E	CENTRIFUGAL ROOF EXHAUST FAN	DIRECT	200	0.5	1,495	1/8	115	1	SEE NOTES
EF-63	COOK	ACED/135C15D	ROOF-AREA-H	CENTRIFUGAL ROOF EXHAUST FAN	DIRECT	1,705	0.5	1,350	1/2	115	1	SEE NOTES
EF-67	COOK	ACED/100C15DH	ROOF-AREA I	CENTRIFUGAL ROOF EXHAUST FAN	DIRECT	400	0.5	1,327	1/8	115	1	SEE NOTES
EF-84	COOK	ACED/120C13D	ROOF-AREA C	CENTRIFUGAL ROOF EXHAUST FAN	DIRECT	650	0.5	1,101	.250	115	1	SEE NOTES
EF-105	COOK	ACED/100C15DM	ROOF-AREA D	CENTRIFUGAL ROOF EXHAUST FAN	DIRECT	300	0.5	1,480	1/8	115	1	SEE NOTES
EF-109	COOK	ACED/100C15DM	ROOF-AREA D	CENTRIFUGAL ROOF EXHAUST FAN	DIRECT	225	0.5	1,480	1/8	115	1	SEE NOTES
EF-110	COOK	ACED/150C15D	ROOF-AREA C	CENTRIFUGAL ROOF EXHAUST FAN	DIRECT	1,850	0.5	1,313	3/4	115	1	SEE NOTES
EF-111	COOK	ACED/100C15DH	ROOF-AREA I	CENTRIFUGAL ROOF EXHAUST FAN	DIRECT	600	0.5	1,550	1/8	115	1	SEE NOTES
EF-120	COOK	ACED/135C13D	ROOF-AREA H	CENTRIFUGAL ROOF EXHAUST FAN	DIRECT	870	0.5	1,295	1/2	115	1	SEE NOTES
EF-140	COOK	ACED/135C15D	ROOF-AREA G	CENTRIFUGAL ROOF EXHAUST FAN	DIRECT	1,705	0.5	1,350	1/2	115	1	SEE NOTES
EF-149	COOK	ACED/135C13D	ROOF-AREA G	CENTRIFUGAL ROOF EXHAUST FAN	DIRECT	870	0.5	1,295	1/2	115	1	SEE NOTES
EF-152	COOK	ACED/100C15DM	ROOF-AREA G	CENTRIFUGAL ROOF EXHAUST FAN	DIRECT	250	0.5	1,480	1/8	115	1	SEE NOTES
EF-P200	COOK	ACED/90C15DL	PENTHOUSE	CENTRIFUGAL ROOF EXHAUST FAN	DIRECT	1,850	0.5	1,313	3/4	115	1	SEE NOTES

NOTES:

1. PROVIDE MOTORIZED DAMPER.
2. PROVIDE ROOF CURB ADAPTER.
3. PROVIDE FACTORY MOUNTED DISCONNECT SWITCH

GRILLE AND DIFFUSER SCHEDULE

MARK	DESIGN BASIS		DESCRIPTION	MODULE SIZE	NECK SIZE	AIR PATTERN	FRAME	C.F.M.	S.P. (WATER)	NOISE LEVEL (NC)	REMARKS
	MAKE	MODEL / SERIES									
CD-1	TITUS	OMNI-AA	SQUARE PLAQUE ARCHITECTURAL DIFFUSER	24" X 24"	6"	4-WAY	SEE NOTE #2	50 - 125	0.044"	13	
CD-2	TITUS	OMNI-AA	SQUARE PLAQUE ARCHITECTURAL DIFFUSER	24" X 24"	8"	4-WAY	SEE NOTE #2	126 - 250	0.055"	12	
CD-3	TITUS	OMNI-AA	SQUARE PLAQUE ARCHITECTURAL DIFFUSER	24" X 24"	10"	4-WAY	SEE NOTE #2	251 - 425	0.082"	15	
CD-4	TITUS	OMNI-AA	SQUARE PLAQUE ARCHITECTURAL DIFFUSER	24" X 24"	12"	4-WAY	SEE NOTE #2	426 - 650	0.036"	20	
CD-5	TITUS	OMNI-AA	SQUARE PLAQUE ARCHITECTURAL DIFFUSER	12" X 12"	6"	4-WAY	SEE NOTE #2	50 - 125	0.044"	13	
CD-6	TITUS	R-OMNI-AA	ROUND PLAQUE ARCHITECTURAL DIFFUSER	24" ROUND	14"	4-WAY	SEE NOTE #2	650-800	0.044"	24	
SG-1	TITUS	300FL	SUPPLY GRILLE - DOUBLE DEFLECTION - 3/4" SPACING	10" X 6"	10" X 6"	ADJUSTABLE	SEE NOTE #2	100 - 200	0.1"	18	
SG-2	TITUS	300FL	SUPPLY GRILLE - DOUBLE DEFLECTION - 3/4" SPACING	30" X 18"	30" X 18"	ADJUSTABLE	SEE NOTE #2	2000	0.11"	28	
SG-3	TITUS	300FL	SUPPLY GRILLE - DOUBLE DEFLECTION - 3/4" SPACING	42" X 24"	42" X 24"	ADJUSTABLE	DUCT MOUNT	3000	0.07"	25	
SG-4	TITUS	300FL	SUPPLY GRILLE - DOUBLE DEFLECTION - 3/4" SPACING	48" X 24"	48" X 24"	ADJUSTABLE	SEE NOTE #2	3700	0.07"	25	
SG-5	TITUS	300FL	SUPPLY GRILLE - DOUBLE DEFLECTION - 3/4" SPACING	12"x8"	12"x8"	ADJUSTABLE	SEE NOTE #2	175-325	0.016"	17	ADD #1
EG-1 / RG-1	TITUS	PDR	PERFORATED CEILING	24" X 24"	6"	RETURN / EXHAUST	SEE NOTE #2	50 - 125	0.13"	13	
EG-2 / RG-2	TITUS	PDR	PERFORATED CEILING	24" X 24"	8"	RETURN / EXHAUST	SEE NOTE #2	126 - 250	0.17"	21	
EG-3 / RG-3	TITUS	PDR	PERFORATED CEILING	24" X 24"	10"	RETURN / EXHAUST	SEE NOTE #2	251 - 400	0.17"	24	
EG-4 / RG-4	TITUS	PDR	PERFORATED CEILING	24" X 24"	12"	RETURN / EXHAUST	SEE NOTE #2	401 - 650	0.12"	25	
EG-5 / RG-5	TITUS	PDR	PERFORATED CEILING	12" X 12"	6"	RETURN / EXHAUST	SEE NOTE #2	50 - 125	0.13"	13	
RG-6	TITUS	350RL	RETURN GRILLE - SINGLE DEFLECTION 35 DEG - 3/4" SPACING	12" X 6"	12" X 6"	RETURN / EXHAUST	SEE NOTE #2	100 - 200	0.073"	17	
RG-7	TITUS	350RL	RETURN GRILLE - SINGLE DEFLECTION 35 DEG - 3/4" SPACING	48" X 36"	48" X 36"	RETURN / EXHAUST	SEE NOTE #2	5600	0.1"	24	
RG-8	TITUS	PDR	PERFORATED CEILING	24" X 24"	18" X 18"	RETURN / EXHAUST	SEE NOTE #2	1000	0.1"	20	
RG-9	TITUS	350RL	RETURN GRILLE - SINGLE DEFLECTION 35 DEG - 3/4" SPACING	28" X 28"	28" X 28"	RETURN / EXHAUST	SEE NOTE #2	3000	0.1"	24	
RG-10	TITUS	350RL	RETURN GRILLE - SINGLE DEFLECTION 35 DEG - 3/4" SPACING	42" X 36"	42" X 36"	RETURN / EXHAUST	SEE NOTE #2	6000	0.1"	27	
RG-11	TITUS	350RL	RETURN GRILLE - SINGLE DEFLECTION 35 DEG - 3/4" SPACING	24" X 20"	24" X 20"	RETURN / EXHAUST	SEE NOTE #2	1200	0.1"	16	
RG-12	TITUS	350RL	RETURN GRILLE - SINGLE DEFLECTION 35 DEG - 3/4" SPACING	36"x18"	36"x18"	RETURN / EXHAUST	SEE NOTE #2	1625	0.01	20	
RG-13	TITUS	PDR	PERFORATED CEILING	22" X 22"	22" X 22"	RETURN / EXHAUST	SEE NOTE #2	1250	0.1"	16	

1. ALL SUPPLY GRILLES AND DIFFUSERS SHALL BE CONSTRUCTED OF ALUMINUM UNLESS OTHERWISE NOTED.
2. COORDINATE DIFFUSER FRAME TYPE TO ENSURE COMPATIBILITY WITH CEILING AND/OR WALL TYPE, SEE ARCHITECTURAL SHEETS FOR ADDITIONAL INFORMATION.

ADD #1

REGISTERED PROFESSIONAL ENGINEER
BY: REEF
062-056761
EXPIRES: 11/30/22
STATE OF ILLINOIS
DATE: 2/21/2022

KEITH Engineering Design
www.keithmep.com
727 SE Jefferson Ave. Peoria, IL 61603
309.1630.4000 - office
309.714.4063 - fax

ROCKFORD PUBLIC SCHOOLS
FEHR GRAHAM
ENGINEERING & ENVIRONMENTAL
220 WOODLAWN AVENUE
AURORA, ILLINOIS 60506
Saavedra Group Architects
504 N. CHURCH STREET
ROCKFORD, ILLINOIS 61103

No.	Date	Revisions
1	3/17/2022	ADDENDUM 1

GUILFORD HIGH SCHOOL
HVAC UPGRADE
ROCKFORD, ILLINOIS

Sheet Title: VENTILATING SCHEDULES

Proj. No.: 2251
Date: 02/21/2022
Drawn: GBW
Approved: RCR
Sheet No.: V501

KEYED ELECTRICAL NOTES (THIS SHEET):

1. LIGHTING TO BE REMOVED IN COORDINATION WITH CEILING OR EQUIPMENT REMOVAL. SEE REVISED PLANS FOR NEW LIGHTING.
2. DISCONNECT FOR EQUIPMENT REMOVAL BY OTHER TRADES. COORDINATE WITH MECHANICAL CONTRACTOR. DEMOLISH CIRCUIT BACK TO SOURCE OR JUNCTION.
3. REMOVE EXISTING FIRE ALARM/DETECTION SYSTEM DEVICE IN COORDINATION WITH CEILING REMOVAL. PROTECT AND REINSTALL IN NEW CEILING.
4. EXISTING SECURITY CAMERA TO BE REMOVED IN COORDINATION WITH CEILING REMOVAL. PROTECT AND REINSTALL IN NEW CEILING.
5. EXISTING SECURITY MOTION SENSOR – WALL MOUNTED CLOSE TO CEILING. REMOVE AS REQUIRED TO PROTECT DURING CEILING REMOVAL AND REPLACEMENT. REINSTALL AFTER NEW CEILING WORK IS COMPLETE.

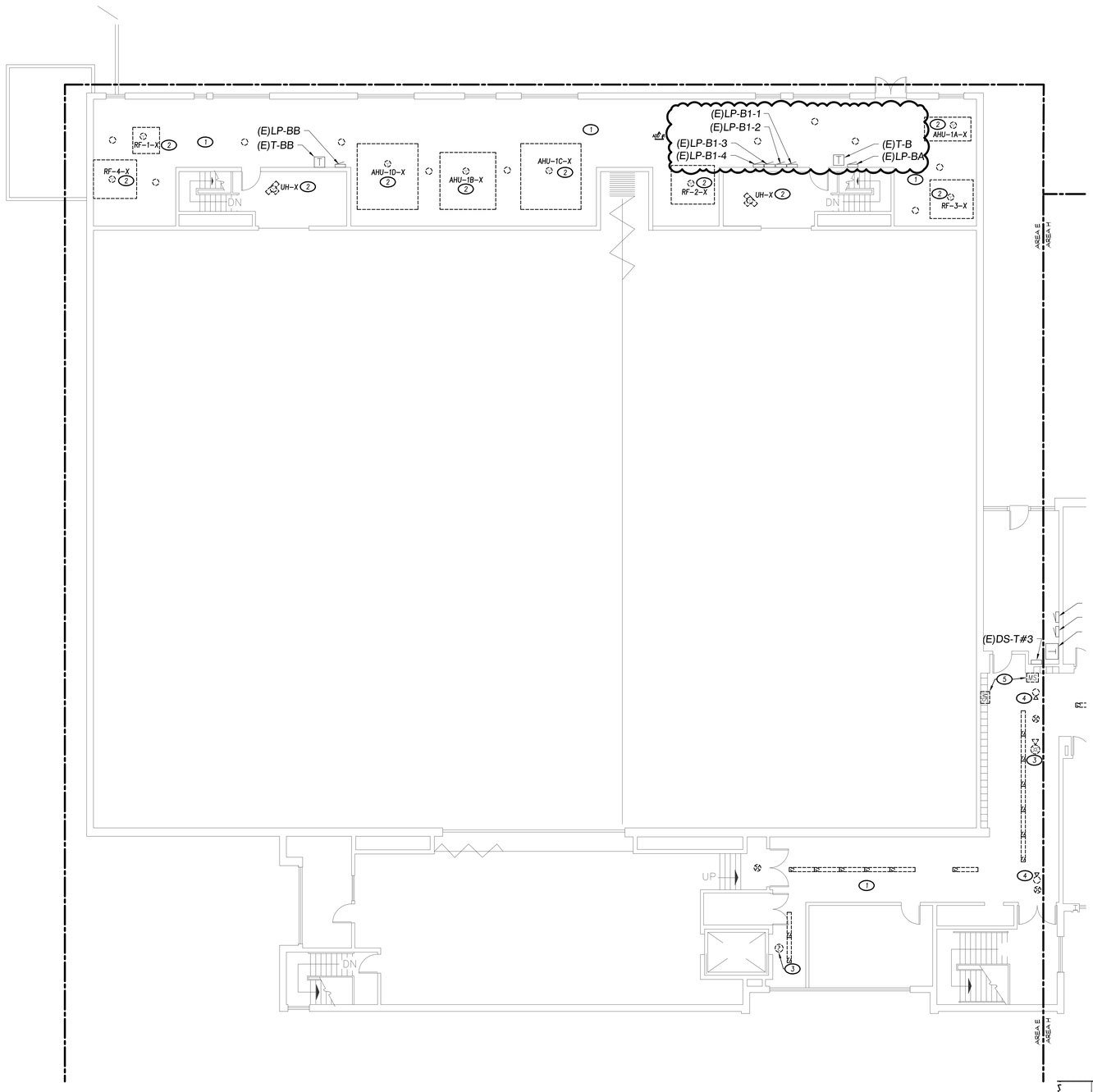

1 SECOND FLOOR PLAN - ELECTRICAL DEMOLITION - AREA E
SCALE: 1/8" = 1'-0"

NORTH

NOTE:
WHERE LIGHTING IS BEING REMOVED FOR REPLACEMENT WITH NEW, ASSOCIATED LIGHTING CONTROL DEVICE(S) SHALL BE REMOVED FOR REPLACEMENT. DEVICES TO COMPLY WITH 2018 I.E.C.C.

NOTE:
ALL NETWORK, SECURITY SYSTEM, AND FIRE ALARM SYSTEM CABLING SHALL BE DISCONNECTED AND PULLED BACK TO AN ACCESSIBLE POINT AS REQUIRED FOR NEW ROUTING. LINE VOLTAGE AND COAXIAL CABLING MAY BE SPLICED. ALL LINE VOLTAGE CONDUCTOR SPLICES SHALL BE IN JUNCTION BOXES.

NOTE:
THE ELECTRICAL CONTRACTOR SHALL INCLUDE ALL LABOR AND MATERIALS IN BID PROPOSAL TO PATCH AND PAINT SURFACES TO MATCH EXISTING CONDITIONS, WHERE SURFACE/RECESSED ELECTRICAL EQUIPMENT, DEVICES, AND RACEWAY SYSTEMS HAVE BEEN REMOVED. GRIND SMOOTH EXISTING PAINT RIDGES LEFT FROM DEVICE AND RACEWAY REMOVAL, PRIOR TO APPLICATION OF NEW PAINT.

NOTE:
NO PROJECT DEMOLITION SHALL OCCUR UNTIL COORDINATION WITH ANY/ALL TRADES WITH AFFECTED DEVICES, EQUIPMENT, WIRING, OR OTHER COMPONENTS HAS BEEN COMPLETED. DEMOLITION WORK THAT CAUSES DAMAGE TO COMPONENTS INTENDED TO REMAIN, OR TO BE REMOVED AND REINSTALLED, SHALL BE REPAIRED/REPLACED AT CONTRACTORS' EXPENSE.

NOTE:
EXISTING SYSTEM DEVICES SHOWN ARE TO AID CONTRACTOR IN DETERMINING THE SCOPE OF DEMOLITION. INDICATED REMOVAL OF EXISTING DEVICES/ COMPONENTS SHALL INCLUDE REMOVAL OF ASSOCIATED SURFACE BOXES, SURFACE WIREWAY, SURFACE CONDUIT, CABLES/CONDUCTORS, AND ALL ASSOCIATED SUPPORTS THAT ARE NOT RETAINED FOR RECONNECTION/ REINSTALLATION, OR ROUTING OF NEW SYSTEM CABLING OR CONDUCTORS.

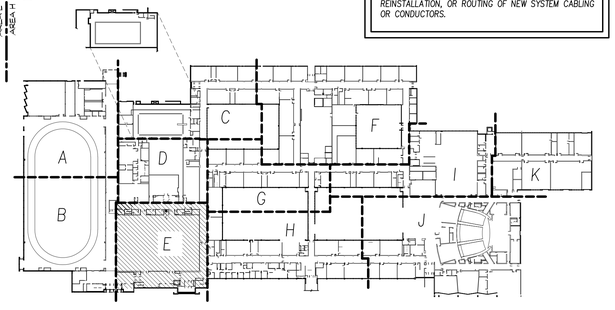

KEY PLAN
SCALE: NOT TO SCALE

NORTH

LICENSED PROFESSIONAL ENGINEER
BRIAN R. KEITH
062-045082
CYRMAL MINNOY
STATE OF ILLINOIS
DATE: 2/21/2022

KEITH Engineering Design
www.keithmep.com
701 SE Jefferson Ave
Peoria, IL 61603
309 / 808-4000 - office
309 / 214-0063 - fax

ROCKFORD PUBLIC SCHOOLS

FEHR GRAHAM
ENGINEERING & ENVIRONMENTAL
230 WOODLAWN AVENUE
AURORA, ILLINOIS 60506

Saavedra Group Architects
504 N. CHURCH STREET
ROCKFORD, ILLINOIS 61103

No.	Date	Revisions

GUILFORD HIGH SCHOOL
HVAC UPGRADE
ROCKFORD, ILLINOIS

Sheet Title: SECOND FLOOR PLAN - ELECTRICAL DEMOLITION - AREA E

Proj. No.:	2251
Date:	02/21/2022
Drawn:	TDC
Approved:	BRK
Sheet No.:	ED12E

KEYED ELECTRICAL NOTES (THIS SHEET):

1. REINSTALL DEVICE PREVIOUSLY REMOVED DURING CEILING DEMOLITION. TEST FOR PROPER OPERATION AFTER REINSTALLATION.
2. CONNECT NEW LIGHTING TO EXISTING BRANCH LIGHTING CIRCUIT SERVING THE ASSOCIATED AREA.
3. RECONNECT/REINSTALL CORRIDOR LIGHTING OCCUPANCY SENSOR.
4. UNDER ALTERNATE BID 2; REPLACE POOL LIGHTING WITH NEW. PROVIDE NEW DIMMING CONTROL SWITCHES AND OCCUPANCY SENSORS TO AUTOMATICALLY TURN DIRECT LIGHTING FIXTURE (TYPES H AND H1) CIRCUIT(S) ON UPON DETECTION OF OCCUPANCY. FIXTURES WILL INCLUDE INTEGRAL SENSORS TO REDUCE LIGHTING TO 30% AFTER 20 MINUTES OF INACTIVITY.
5. REINSTALL POOL SPECTATOR SPEAKERS, SUSPENDED FROM STRUCTURE USING STAINLESS STEEL AIRCRAFT CABLE. (NO CEILING WILL BE INSTALLED.)

ADD #1

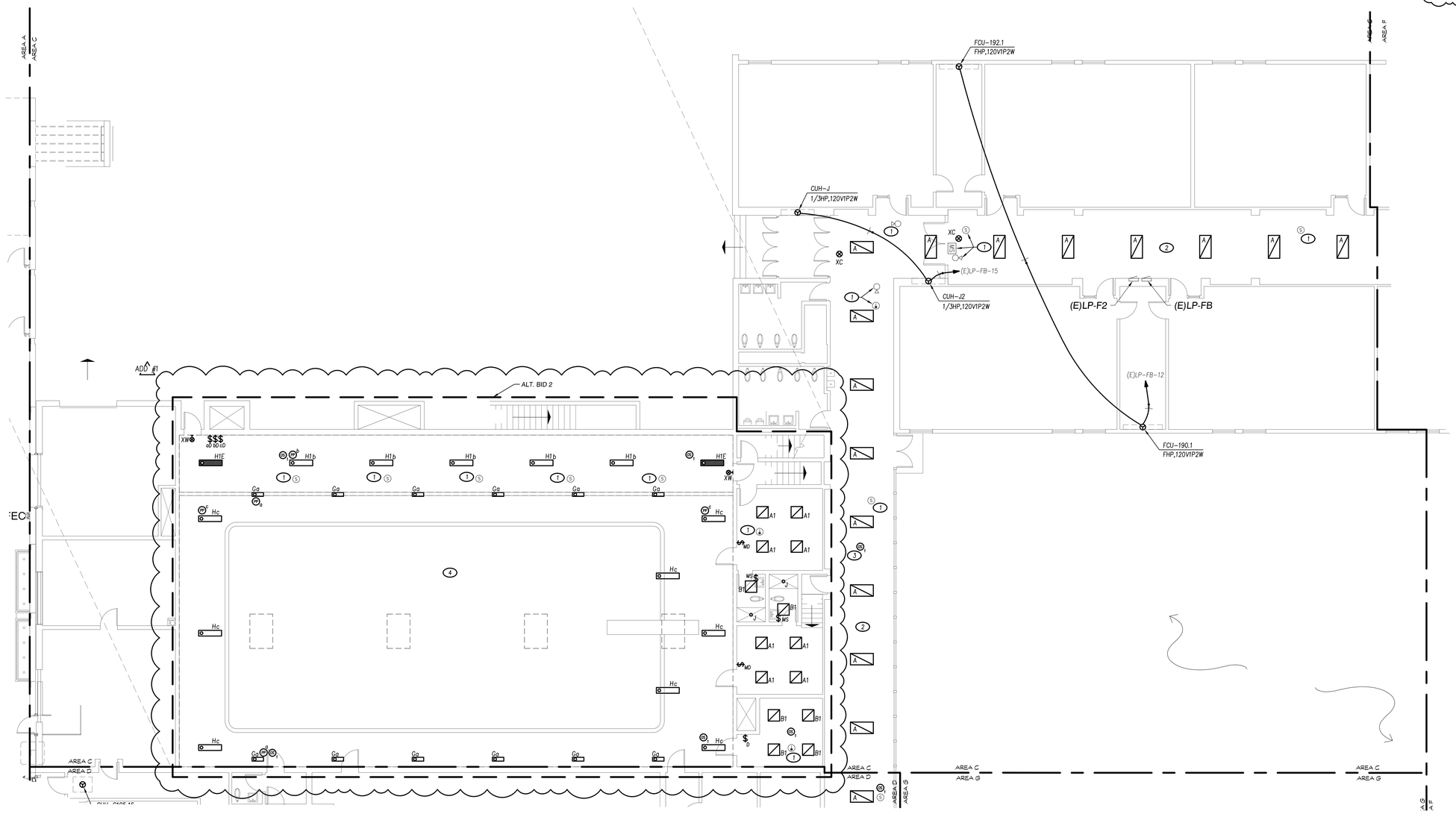

1 FIRST FLOOR PLAN - NEW ELECTRICAL - AREA C
SCALE: 1/8" = 1'-0"

NORTH

NOTE:
WORKING SPACE SHALL BE REQUIRED FOR ALL ELECTRICAL EQUIPMENT INCLUDING BUT NOT LIMITED TO SWITCHGEAR, PANELBOARDS, VARIABLE FREQUENCY DRIVES, DISCONNECT SWITCHES OR OTHER ENCLOSED EQUIPMENT. ALL INSTALLATIONS SHALL COMPLY WITH ARTICLE 110 OF THE NATIONAL ELECTRICAL CODE. THIS SHALL BE COORDINATED WITH ALL TRADES. RELOCATION OF ANY MATERIALS NOT IN COMPLIANCE WILL BE AT THE CONTRACTOR'S EXPENSE:

1. THE DEPTH OF THE WORKING SPACE SHALL NOT BE LESS THAN THAN 3'-0" BEYOND THE FRONT OF THE ELECTRICAL EQUIPMENT. IT SHALL BE CLEAR, EXTENDING FROM THE FLOOR TO THE HEIGHT OF THE TOP OF THE EQUIPMENT BUT NOT LESS THAN 6'-6". THE WIDTH SHALL BE EQUAL TO THE WIDTH OF THE EQUIPMENT BUT NOT LESS THAN 30".
2. THE SPACE DIRECTLY ABOVE AND BELOW THE EQUIPMENT SHALL BE DEDICATED TO ELECTRICAL SYSTEMS ONLY. THE SPACE SHALL BE EQUAL TO THE WIDTH AND DEPTH OF THE EQUIPMENT EXTENDING FROM THE FLOOR TO THE STRUCTURE. NO PIPING, DUCTS OR OTHER EQUIPMENT FOREIGN TO THE ELECTRICAL INSTALLATION SHALL BE LOCATED IN THIS AREA.

NOTE:
THE ELECTRICAL CONTRACTOR SHALL INCLUDE ALL LABOR AND MATERIALS IN BID PROPOSAL TO PATCH AND PAINT EXISTING WALLS TO MATCH EXISTING CONDITIONS, WHERE SURFACE/RECESSED ELECTRICAL EQUIPMENT AND RACEWAY SYSTEMS HAVE BEEN REMOVED.

NOTE:
ALL HOME RUN CONDUCTORS SHALL BE MINIMUM #10AWG.

NOTE:
ALL EMERGENCY AND EXIT LUMINAIRES SHALL BE CONNECTED TO AN UNSWITCHED PORTION OF THE LOCAL EMERGENCY LIGHTING CIRCUIT.

NOTE:
1. HANDWRITTEN BRANCH CIRCUIT PANELBOARD SCHEDULES ARE NOT ACCEPTABLE.
2. ALL CIRCUITS IN EXISTING PANELS MODIFIED WITH THE SCOPE OF WORK AND NEW PANELS SHALL HAVE TYPEWRITTEN CIRCUIT DIRECTORIES WITH SPECIFIC INFORMATION ON DEVICE AND ROOM(S) SERVED BY THE CORRESPONDING BREAKER.
3. INCLUDE A PRINTED THERMOGRAPHIC LABEL AT EACH BREAKER SPACE CORRESPONDING TO THE TYPEWRITTEN PANEL SCHEDULE.
4. ALL WIRING DEVICES SHALL HAVE A THERMOGRAPHIC LABEL ON EACH FACE PLATE INDICATING THE PANEL AND CIRCUIT NUMBER THE DEVICE IS SERVED BY.

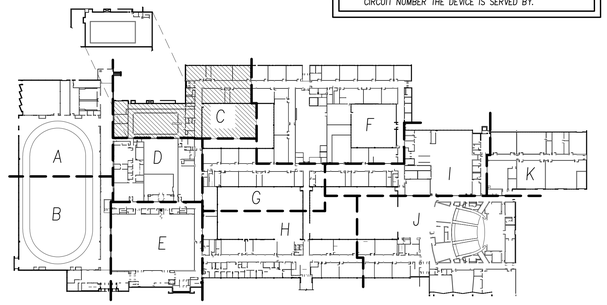

KEY PLAN
SCALE: NOT TO SCALE

NORTH

ILLINOIS PROFESSIONAL ENGINEER
BRIAN R. KEITH
062.049396
EXPIRES: 11/30/2023
STATE OF ILLINOIS
DATE: 2/21/2022

KEITH Engineering Design
www.keithmep.com
701 NE Jefferson Ave
Peoria, IL 61603
309.1908.4005 office
309.214.4063 fax

ROCKFORD PUBLIC SCHOOLS
FEHR GRAHAM
ENGINEERING & ENVIRONMENTAL
230 WOODLAWN AVENUE
AURORA, ILLINOIS 60506
Saavedra Group Architects
504 W. CHURCH STREET
ROCKFORD, ILLINOIS 61103

No.	Date	Revisions
1	3/17/2022	ADDENDUM 1

GUILFORD HIGH SCHOOL
HVAC UPGRADE
ROCKFORD, ILLINOIS

Sheet Title: FIRST FLOOR PLAN - NEW ELECTRICAL AREA C

Proj. No.: 2251
Date: 02/21/2022
Drawn: TDC
Approved: BRK
Sheet No.: E11C

ADD #1

GUILFORD LUMINAIRE SCHEDULE

CALLOUT	SYMBOL	DESCRIPTION	MOUNTING	MODEL	MAX. WATTS	TOTAL VA	COLOR TEMP(K)/CRI	MIN. LUMENS/ WATT	LUMENS / LAMP
A		RECESSED 2x4 LED FIXTURE WITH DIE-FORMED WHITE STEEL HOUSING, SMOOTH REFLECTOR, ROUND-RIBBED ACRYLIC DIFFUSER, UNIVERSAL INPUT VOLTAGE, 0-10VDC, 1% DIMMING, ELECTRONIC DRIVER, AND INTEGRATED nLIGHT ADDRESSABILITY.	RECESSED	LITHONIA #2BLT4 48L ADP MVOLT GZ1 LP840 N100	38	38	4000/80	133	5000
A1		RECESSED 2x2 LED FIXTURE WITH DIE-FORMED WHITE STEEL HOUSING, SMOOTH REFLECTOR, ROUND-RIBBED ACRYLIC DIFFUSER, UNIVERSAL INPUT VOLTAGE, 0-10VDC, 1% DIMMING ELECTRONIC DRIVER, AND INTEGRATED nLIGHT ADDRESSABILITY.	RECESSED	LITHONIA #2BLT2 40L ADP MVOLT GZ1 LP840 N100	32	32	4000/80	129	4100
B		RECESSED 2x4 FLAT PANEL LED FIXTURE WITH WHITE ALUMINUM FRAME, WHITE EDGE-LIT LENS, MAXIMUM 2.5" DEPTH AT DRIVER HOUSING, UNIVERSAL INPUT VOLTAGE, 0-10VDC, 1% DIMMING, ELECTRONIC DRIVER, AND INTEGRATED nLIGHT ENABLED.	RECESSED	LITHONIA #EPANL 2X4 4000LM 80CRI 40K MIN1 ZT MVOLT NLIGHT	40	40	4000/80	110	4000
B1		RECESSED 2x2 LED FIXTURE WITH WHITE ALUMINUM FRAME, WHITE EDGE-LIT LENS, MAXIMUM 2.5" DEPTH AT DRIVER HOUSING, UNIVERSAL INPUT VOLTAGE, 0-10VDC, 1% DIMMING, ELECTRONIC DRIVER, AND INTEGRATED nLIGHT ENABLED.	RECESSED	LITHONIA #EPANL 2X2 4000LM 80CRI 40K MIN1 ZT MVOLT NLIGHT	35	35	4000/80	125	4000
C		SURFACE OR SUSPENDED 4' LED FIXTURE WITH WRAP-AROUND ACRYLIC LENS, WHITE STEEL HOUSING, CURVED, FACETED LENS, UNIVERSAL INPUT VOLTAGE, 0-10VDC, 10% DIMMING ELECTRONIC DRIVER, AND nLIGHT ENABLED. FIXTURE SHALL BE DLC LISTED WITH 5-YEAR WARRANTY.	SURFACE	LITHONIA #STL4 48L MVOLT GZ10 LP840 N100	45	45	4000/80	110	5000
D		SURFACE OR SUSPENDED, 48"L x 2.75"W x 2.25"H LENSED LED STRIP LIGHT WITH WHITE STEEL HOUSING, WHITE ACRYLIC LENS, AND ELECTRONIC UNIVERSAL INPUT VOLTAGE, 0-10VDC DIMMING DRIVER. FIXTURE SHALL BE DLC LISTED WITH 5-YEAR WARRANTY.	SURFACE	LITHONIA #CSS L48 AL03 MVOLT 40K 80CRI	45	45	4000/80	115	5000
E		EMERGENCY BATTERY BACKUP LED LIGHTING UNIT, SURFACE MOUNTED, MINIMUM 90-MINUTES ILLUMINATION UPON LOSS OF POWER, COMPACT, LOW-PROFILE, WHITTE THERMOPLASTIC HOUSING, 120/277-VOLT INPUT, TWO LED ADJUSTABLE LAMP HEADS, MAINTENANCE-FREE LEAD-CALCUIM OR NICKEL-CADMIUM BATTERY.	SURFACE	LITHONIA #ELM2L	5	5			0
F		48" DIAMETER RECESSED LED FIXTURE FOR INSTALLATION IN GRID CEILING, WITH WHITE ACRYLIC CONCAVE LENS, STEEL HOUSING, WHITE TRIM, AND 277V, 120V, OR UNIVERSAL VOLTAGE INPUT CONNECTION. CONTRACTOR SHALL VERIFY EXISTING LIGHTING CIRCUIT VOLTAGE PRIOR TO ORDERING. FIXTURE SHALL BE nLIGHT ENABLED.	RECESSED	MARK ARCH. #MGL 48IN 9000LM 40K DARK NLIGHT 277 CCV APPROVED EQUIVALENT	100	100	4000/80	100	9200
G		PENDANT HUNG, HIGH OUTPUT, INDIRECT LED WITH WHITE ALUMINUM HOUSING, CAST ALUMINUM HEAT SINK, FORWARD THROW DISTRIBUTION, CLEAR GLASS LENS, SILICONE LENS GASKET AND IP65 RATING, WHITE NATATORIUM, CORROSION RESISTANT POWDER COAT FINISH, STAINLESS STEEL HARDWARE, MINIMUM 100,000 HR L70 LUMEN MAINTENANCE RATING, UNIVERSAL INPUT VOLTAGE, 0-10VDC DIMMING ELECTRONIC DRIVER, AND WIRELESS nLIGHT ENABLED. MOUNT TO BOTTOM OF ROOF FRAMING STRUCTURE WITH SPANNING FIBERGLASS STRUT WHERE SUSPENDED BETWEEN STRUCTURE. AT 48" BELOW BOTTOM OF ROOF DECK.	WALL	KENALL #IN9 20 PM WM FT 130L 40K8 DIM5 DV PM36 ALSL	150	150	4000/80	115	16000
H		SURFACE/SUSPENDED, HIGH OUPUT, 12" x 48" NATATORIUM LED FIXTURE WITH RUSTPROOF, CORROSION RESISTANT, MARINE GRADE, EXTRUDED ALUMINUM HOUSING AND DIE-CAST ALUMINUM ROUNDED END CAPS, IP64 WET LOCATION LISTING, THERMAL PROTECTION, FROSTED POLYCARBONATE PRISMATIC ACRYLIC LENS, AND UNIVERSAL INPUT VOLTAGE, 0-10VDC DIMMING ELECTRONIC DRIVER. FIXTURE SHALL HAVE INTEGRAL MOTION SENSOR THAT WILL DIM FIXTURE TO 30% AFTER 20 MINUTES OF INACTIVITY. MINIMUM 10-YEAR WARRANTY AND MIN. 100,000 HR L70 RATING.	SURFACE	KENALL #MLHA12 48 R MW PP 150L40K DCC 1 DV MS	167	167	4000/80	90	16500
H1		SURFACE/SUSPENDED, HIGH OUPUT, 12" x 48" NATATORIUM LED FIXTURE WITH RUSTPROOF, CORROSION RESISTANT, MARINE GRADE, EXTRUDED ALUMINUM HOUSING AND DIE-CAST ALUMINUM ROUNDED END CAPS, IP64 WET LOCATION LISTING, THERMAL PROTECTION, FROSTED POLYCARBONATE PRISMATIC ACRYLIC LENS, AND UNIVERSAL INPUT VOLTAGE, 0-10VDC DIMMING ELECTRONIC DRIVER. FIXTURE SHALL HAVE INTEGRAL MOTION SENSOR THAT WILL DIM FIXTURE TO 30% AFTER 20 MINUTES OF INACTIVITY. MINIMUM 10-YEAR WARRANTY AND MIN. 100,000 HR L70 RATING.	SURFACE	KENALL #MLHA12 48 R MW PP 45L40K DCC 1 DV MS	50	50	4000/80	100	5000
H1E		SURFACE/SUSPENDED, HIGH OUPUT, 12" x 48" NATATORIUM LED EMERGENCY / NIGHT LIGHT FIXTURE WITH RUSTPROOF, CORROSION RESISTANT, MARINE GRADE, EXTRUDED ALUMINUM HOUSING AND DIE-CAST ALUMINUM ROUNDED END CAPS, IP64 WET LOCATION LISTING, THERMAL PROTECTION, FROSTED POLYCARBONATE PRISMATIC ACRYLIC LENS, AND UNIVERSAL INPUT VOLTAGE, 0-10VDC DIMMING ELECTRONIC DRIVER. MAKE CONNECTION TO ADJACENT GENERATOR BACKUP LIGHTING CIRCUIT. FIXTURE SHALL HAVE INTEGRAL MOTION SENSOR THAT WILL DIM FIXTURE TO 30% AFTER 20 MINUTES OF INACTIVITY. MINIMUM 10-YEAR WARRANTY AND MIN. 100,000 HR L70 RATING.	SURFACE	KENALL #MLHA12 48 R MW PP 45L40K DCC 1 DV MS	50	50	4000/80	100	5000
J		RECESSED 4" LED CAN LIGHT, WITH ALUMINUM HOUSING, WET LOCATION LISTING, WHITE TRIM RING, OPEN CLEAR DIFFUSE REFLECTOR, AND UNIVERSAL VOLTAGE INPUT DRIVER.	RECESSED	LITHONIA #LDN4 40/15 L04 AR LSS MVOLT GZ10 TRW	20	20	4000/80	85	0
X		EXIT FIXTURE, LED, TOP, BACK OR END MOUNTING, STENCIL FACE, WHITE VANDAL-RESISTANT CAST ALUMINUM HOUSING, CLEAR UV RESISTANT POLYCARBONATE FACE COVER, SINGLE FACE RED PANEL, 120/277 DUAL VOLTAGE INPUT, NICKEL-CADMIUM BACK-UP BATTERY. PROVIDE CONNECTION TO AN UNSWITCHED LEG OF LIGHTING CIRCUIT SERVING ASSOCIATED AREA. WHERE FIXTURE IS INSTALLED ON CEILING, PROVIDE RIGID SUPPORT ABOVE CEILING FOR OUTLET BOX, TO WITHSTAND INTENTIONAL OR ACCIDENTAL IMPACT.	SURFACE	LITHONIA #LV S W 1/2 R 120/277 EL N UM	5	5			0
XW		SAME AS TYPE 'X' EXCEPT WALL MOUNTED	WALL		5	5			0

LUMINAIRE SCHEDULE NOTES

1. CONTRACTOR SHALL REFER TO ARCHITECTURAL REFLECTED CEILING PLANS, MECHANICAL SYSTEM PLANS, DETAILS, SECTIONS, AND ELEVATIONS FOR AID IN COORDINATION OF FIXTURE LOCATIONS AND ANY INTERFERENCES.
2. CONTRACTOR SHALL PROVIDE COPIES OF COMPLETE FIXTURE SCHEDULES, LIGHTING PLANS, AND LIGHTING SPECIFICATIONS TO ALL SUPPLIERS OR MANUFACTURERS' REPRESENTATIVES INVOLVED IN FIXTURE PRICING OR ORDERING, PRIOR TO BID.
3. FIXTURES SHALL BE PROVIDED WITH FEATURES, OPTIONS, AND ACCESSORIES REQUIRED FOR COMPLETE INSTALLATION AND THOSE LISTED IN FIXTURE MODEL NUMBERS PROVIDED, SPECS., AND WRITTEN DESCRIPTION. IF CONFLICTS EXIST BETWEEN THESE, NOTIFY A/E FOR CLARIFICATION PRIOR TO BIDDING OR ORDERING.
4. ALL FIXTURES RECESSED IN, OR SUSPENDED FROM SUSPENDED ACOUSTICAL TILE (S.A.T.) CEILINGS SHALL HAVE INDEPENDENT SUPPORT FROM BUILDING FRAMING OR OTHER APPROVED STRUCTURE.
5. CONTRACTOR SHALL VERIFY LUMINAIRE TYPES INDICATED ARE COMPATIBLE WITH MANUFACTURERS' CURRENT MODEL FIXTURES SUBMITTED. NOTIFY A/E IMMEDIATELY OF DISCREPANCIES AND MAKE NECESSARY CORRECTIONS PRIOR TO BIDDING.
6. ALL LAMP AND DRIVER COMBINATIONS SHALL BE CEE CERTIFIED.
7. LAY-IN LIGHTING FIXTURES: USE GRID AS A SUPPORT ELEMENT.
8. INSTALL CEILING SUPPORT SYSTEM RODS OR WIRES INDEPENDENT OF THE CEILING SUSPENSION DEVICES FOR EACH FIXTURE FOR SUPPLEMENTAL SUPPORT. LOCATE NOT MORE THAN 6 INCHES FROM THE LIGHTING FIXTURE CORNERS.
9. SUPPORT CLIPS: FASTEN TO LIGHTING FIXTURES AND TO CEILING GRID MEMBERS AT OR NEAR EACH FIXTURE CORNER WITH CLIPS THAT ARE UL LISTED FOR THE APPLICATION.
10. FIXTURES OF SIZES LESS THAN THE CEILING GRID: INSTALL AS INDICATED ON THE REFLECTED CEILING PLANS OR CENTER IN ACOUSTICAL PANEL. SUPPORT FIXTURES INDEPENDENTLY WITH AT LEAST TWO 3/4-INCH METAL CHANNELS SPANNING AND SECURED TO THE CEILING TEES.
11. ALL INTERIOR LED COLORS SHALL BE 4000K UNLESS SPECIFICALLY NOTED OTHERWISE.

MATERIAL SCHEDULE

SYMBOL	DESCRIPTION	MANUFACTURER
COVER PLATES	ALL COVER PLATES FOR DEVICES SHALL BE THERMOPLASTIC CONSTRUCTION IN FINISHED AREAS. COVER PLATES IN UNFINISHED SPACES SHALL BE GALVANIZED STEEL CONSTRUCTION. ALL DEVICES AND COVER PLATE COLORS SHALL MATCH EXISTING INSTALLATIONS EXACTLY. ALL DEVICE PLATES SHALL INCLUDE A PRE-PRINTED LABEL INDICATING THE PANEL AND CIRCUIT NUMBER SERVING THE DEVICE. THE LABEL SHALL HAVE A CLEAR BACK GROUND WITH BLACK LETTERING.	HUBBELL LEVITON PASS & SEYMOUR LUTRON COOPER
T UTILITY	COM-ED UTILITY TRANSFORMER, FURNISHED AND INSTALLED BY COMMONWEALTH EDISON	BY UTILITY
	NEMA 3R CT CABINET APPROVED BY UTILITY COMPANY - PROVIDE MOUNTING STRUT TO ACCOMMODATE UNEVEN MOUNTING SURFACE.	SQUARE D MILBANK EATON/ CUTLER HAMMER APPROVED EQUIVALENT
MSB	NEW SWITCHBOARD; 2500A, 480Y/277V, 3Ø, 4W MAIN BREAKER WITH BRANCH BREAKERS INDICATED	SQUARE D QED SERIES G.E. INDUSTRIAL/ABB SIEMENS EATON/CUTLER-HAMMER
PH-H1	NEW BRANCH CIRCUIT PANELBOARD IN NEMA 1 ENCLOSURE, 480Y/277V, 3-PHASE, 4-WIRE, BUS RATING AS INDICATED ON RISER DIAGRAMS AND PANEL SCHEDULES. FURNISH WITH BREAKERS AS REQUIRED FOR LOADS, AS INDICATED ON PANEL SCHEDULES.	SQUARE D NF SERIES G.E. INDUSTRIAL SIEMENS EATON/CUTLER-HAMMER
PH-L1	NEW BRANCH CIRCUIT PANELBOARD IN NEMA 1 ENCLOSURE, 208Y/120V, 3-PHASE, 4-WIRE, BUS RATING AS INDICATED ON RISER DIAGRAMS AND PANEL SCHEDULES. FURNISH WITH BREAKERS AS REQUIRED FOR LOADS, AS INDICATED ON PANEL SCHEDULES.	SQUARE D NQ SERIES G.E. INDUSTRIAL SIEMENS EATON/CUTLER-HAMMER
T T-PH1	DRY-TYPE, 45KVA, 480V PRIMARY, 208Y/120V 3-PHASE, 4-WIRE SECONDARY VOLTAGE TRANSFORMER WITH STEEL, VENTED HOUSING AND ALUMINUM WINDINGS. SEE SPECIFICATIONS FOR ADDITIONAL REQUIREMENTS.	SQUARE D EX SERIES, CLASS 7400 G.E. INDUSTRIAL SIEMENS EATON/ CUTLER HAMMER
(E)XXX	EXISTING BRANCH CIRCUIT PANELBOARD IN NEMA 1 ENCLOSURE TO REMAIN, 480Y/277V, 3-PHASE, 4-WIRE, BUS RATING AS INDICATED ON RISER DIAGRAMS AND PANEL SCHEDULES. FURNISH AND INSTALL BREAKERS AS REQUIRED FOR NEW CIRCUIT LOADS, AS INDICATED ON PANEL SCHEDULES.	CHICAGO SWITCHBOARD
(E)XXX	EXISTING BRANCH CIRCUIT PANELBOARD IN NEMA 1 ENCLOSURE TO REMAIN, 208Y/120V, 3-PHASE, 4-WIRE, BUS RATING AS INDICATED ON RISER DIAGRAMS AND PANEL SCHEDULES. FURNISH AND INSTALL BREAKERS AS REQUIRED FOR NEW CIRCUIT LOADS, AS INDICATED ON PANEL SCHEDULES.	CHICAGO SWITCHBOARD
DPX	NEW DISTRIBUTION PANELBOARD IN NEMA 1 ENCLOSURE, 480Y/277V, 3-PHASE, 4-WIRE, BUS RATING AS INDICATED ON RISER DIAGRAMS AND PANEL SCHEDULES. FURNISH AND INSTALL BREAKERS AS REQUIRED FOR LOADS INDICATED ON PANEL SCHEDULES.	SQUARE D I-LINE SERIES G.E. INDUSTRIAL/ABB SIEMENS EATON/CUTLER-HAMMER
PANEL X	NEW BRANCH PANEL, 208/120 VOLT, 3PHASE, 4 WIRE, HINGED COVER, COPPER BUS, COPPER GROUND BUS AND NEUTRAL BUS. SEE PLANS AND SCHEDULE FOR ADDITIONAL INFORMATION.	SQUARE D NQ SERIES EATON SIEMENS
	ELECTRICAL EQUIPMENT CONNECTION; SIZE CONNECTION PER THE NATIONAL ELECTRICAL CODE, UNLESS LARGER CAPACITY IS NOTED OTHERWISE. COORDINATE EXACT REQUIREMENTS WITH EQUIPMENT SUPPLIER PRIOR TO ROUGH-IN.	
VFD	VARIABLE FREQUENCY DRIVE, WITH BYPASS ISOLATION, SUITABLE FOR HVAC APPLICATIONS, WITH PWM TRANSISTORIZED IGBT INVERTER, FULLY DIGITAL, WITH RECTIFYING, DC FILTERING AND SWITCHING SECTIONS, THREE-PHASE INPUT, THREE-PHASE OUTPUT, ADJUSTABLE RETRY FUNCTION, PROGRAMMABLE FUNCTIONS FOR ACCELERATION AND DECELERATION RATES AND PATTERNS, ELECTRONIC THERMAL PROTECTION SETTINGS, BASE FREQUENCIES, VOLTAGE BOOSTS, AND STALL PROTECTION. DEVICE SHALL BE CAPABLE OF ACCEPTING EITHER 0-10VDC OR 4-20mA INPUT SIGNALS WITH A MINIMUM OF ONE PROGRAMMABLE ANALOG AND EIGHT DIGITAL INPUTS. PROVIDE WITH 5000AIC RATING. COORDINATE HORSEPOWER RATING WITH EQUIPMENT SERVED ON THE DRAWINGS.	SQUARE D S-FLEX SERIES EATON H-MAX SERIES TOSHIBA Q9+ SERIES ALLEN-BRADLEY POWERFLEX SERIES
	DISCONNECT SWITCH, 600-VOLT, NON-FUSIBLE, HEAVY DUTY, LOCKABLE IN OFF POSITION, PROVIDE GROUND LUG, UL LISTED. COORDINATE ENCLOSURE TYPE WITH LOCATION. SIZE AND QUAINTLY OF POLES SHALL MATCH EQUIPMENT DEVICE IS SERVING.	SQUARE D CLASS 3110 G.E. INDUSTRIAL SIEMENS EATON/CUTLER-HAMMER
MS	MANUAL MOTOR STARTER, 480-VOLT, 3-POLE, NEMA 1 ENCLOSURE, LOCKABLE IN THE OFF POSITION, FURNISH AND INSTALL THERMAL OVERLOADS SIZED PER THE SUPPLIED MOTOR NAMEPLATE.	SQUARE D GV2P32 G.E. INDUSTRIAL SIEMENS EATON/CUTLER-HAMMER
G/W	DUPLEX GROUND-FAULT WEATHERPROOF RECEPTACLE; STRAIGHT BLADE, 20-AMPERE SPECIFICATION GRADE, 3-WIRE GROUNDING TYPE, IMPACT RESISTANT THERMOPLASTIC FACE, TEST AND RESET BUTTONS IN FACE, FEDERAL SPECIFICATION AND U.L. LISTED, 2003 U.L. 943 COMPLIANT WITH WEATHERPROOF BOX AND GASKETED COVERPLATE, NEMA 4 RATED "WHILE-IN-USE".	HUBBELL 5300 SERIES/ WPM826MP LEVITON PASS & SEYMOUR COOPER
	DUPLEX GROUND-FAULT RECEPTACLE; STRAIGHT BLADE, 20-AMPERE, SPECIFICATION GRADE, 3-WIRE GROUNDING TYPE, IMPACT RESISTANT THERMOPLASTIC FACE, TEST AND RESET BUTTONS IN FACE, FEDERAL SPECIFICATION AND U.L. LISTED, 2003 U.L. 943 COMPLIANT.	HUBBELL 5300 SERIES LEVITON PASS & SEYMOUR COOPER
G	DUPLEX GROUND-FAULT RECEPTACLE; STRAIGHT BLADE, 20-AMPERE SPECIFICATION GRADE, 3-WIRE GROUNDING TYPE, IMPACT RESISTANT THERMOPLASTIC FACE, TEST AND RESET BUTTONS IN FACE, FEDERAL SPECIFICATION AND U.L. LISTED, 2003 U.L. 943 COMPLIANT.	HUBBELL 5300 SERIES/ WPM826MP LEVITON PASS & SEYMOUR COOPER
$\$_{3D}$	ELECTRONIC LOW-VOLTAGE (0-10VDC) DIMMING SWITCH WITH 3-WAY CAPABILITIES, TO BE USED IN CONJUNCTION WITH ANOTHER, NON-DIMMING 3-WAY SWITCH. DEVICE SHALL MATCH OTHER SWITCHES IN STYLE AND COLOR.	SENSOR SWITCH SWITCHPOD SERIES OR APPROVED EQUAL FROM COOPER, HUBBELL, LEVITON, LUTRON, OR P&S LEGRAND
$\$_{D}$	ELECTRONIC LOW-VOLTAGE (0-10VDC), MINIMUM 700 WATT CAPACITY, DIMMER SWITCH COMPATIBLE WITH FIXTURES WITH ELECTRONIC LED DRIVERS. CONTRACTOR SHALL COORDINATE COMPATIBILITY OF DIMMER WITH FIXTURE DRIVERS. FIVE YEAR WARRANTY. DEVICE SHALL BE WHITE COLOR.	SENSOR SWITCH SWITCHPOD SERIES OR APPROVED EQUAL FROM COOPER, HUBBELL, LEVITON, LUTRON, OR P&S LEGRAND
$\$_{MS}$	MANUAL-ON/AUTO-OFF WALL SWITCH/OCCUPANCY/VACANCY SENSOR, 180-DEGREE COVERAGE OF 900 SF, INFRARED TECHNOLOGY, 120/277 VOLT, DIGITAL TIME DELAY ADJUSTMENT FROM 30 SECONDS TO 30 MINUTES, ADJUSTABLE SENSITIVITY FROM 20% TO 100%, ADJUSTABLE LIGHT LEVEL SETTING OF 2 TO 200 FOOT-CANDLES, COMPATIBLE WITH ALL ELECTRONIC BALLASTS, WITH LED INDICATOR TO INDICATE OCCUPANCY. FIVE YEAR WARRANTY. PROGRAM TIMER TO SHUT OFF LIGHTS AFTER 15 MINUTES OF NO ACTIVITY IN THE SPACE. TRAIN OWNER'S REPRESENTATIVE ON ADJUSTMENT FOR THE SENSOR FOR FUTURE ADJUSTMENTS.	SENSORSWITCH WSD WATTSTOPPER LEVITON LUTRON HUBBELL PASS & SEYMOUR COOPER
$\$_{MD}$	MANUAL-ON/AUTO-OFF WALL SWITCH/OCCUPANCY/VACANCY SENSOR & DIMMER, 180-DEGREE COVERAGE OF 900 SF, INFRARED TECHNOLOGY, 120/277 VOLT, DIGITAL TIME DELAY ADJUSTMENT FROM 30 SECONDS TO 30 MINUTES, ADJUSTABLE SENSITIVITY FROM 20% TO 100%, ADJUSTABLE LIGHT LEVEL SETTING OF 2 TO 200 FOOT-CANDLES, COMPATIBLE WITH ALL ELECTRONIC BALLASTS, WITH LED INDICATOR TO INDICATE OCCUPANCY. FIVE YEAR WARRANTY. PROGRAM TIMER TO SHUT OFF LIGHTS AFTER 15 MINUTES OF NO ACTIVITY IN THE SPACE. TRAIN OWNER'S REPRESENTATIVE ON ADJUSTMENT FOR THE SENSOR FOR FUTURE ADJUSTMENTS.	SENSORSWITCH WSX-D LEVITON EATON

MATERIAL SCHEDULE

SYMBOL	DESCRIPTION	MANUFACTURER
OS 1	DUAL-TECHNOLOGY (PASSIVE INFRARED (PIR) AND ULTRASONIC OR MICROPHONIC), EXTENDED RANGE CEILING SENSOR, 360 DEGREE COVERAGE OF 30 FEET, LOW-VOLTAGE, TIME DELAY ADJUSTMENT FROM 30-SECONDS TO 20-MINUTES. INCLUDE REQUIRED ASSOCIATED POWER PACK/RELAY.	EXISTING
PP	nLIGHT DIMMING RELAY POWER PACK, LOW-VOLTAGE, SUITABLE FOR INTERFACE INCLUDING ON/OFF AND DIMMING CONTROL FOR GROUPS OF LUMINAIRES. EXTEND CAT 5E CABLE FROM SWITCH TO ASSOCIATED nLIGHT DEVICES PER MANUFACTURER INSTRUCTIONS.	nLIGHT nPP16 D
OS 1	nLIGHT DUAL-TECHNOLOGY (PASSIVE INFRARED (PIR) AND ULTRASONIC OR MICROPHONIC), EXTENDED RANGE CEILING SENSOR, 360 DEGREE COVERAGE OF 30 FEET, LOW-VOLTAGE, TIME DELAY ADJUSTMENT FROM 30-SECONDS TO 20-MINUTES. EXTEND CAT 5E CABLE FROM SWITCH TO ASSOCIATED nLIGHT DEVICES PER MANUFACTURER INSTRUCTIONS.	nLIGHT nCM PDT 10 RJB
MS	EXISTING SECURITY MOTION SENSOR TO BE REMOVED AND REINSTALLED IN APPROXIMATELY THE SAME LOCATION TO ACCOMMODATE WALL TREATMENT UPGRADES OR CEILING REMOVAL AND/OR REPLACEMENT. REMOVE, CLEAN AND STORE THE DEVICE DURING DEMOLITION. REINSTALL AND RECONNECT EXISTING DEVICE WHEN NEW WALL TREATMENT OR CEILING GRID AND TILES ARE INSTALLED. EXTEND EXISTING CABLING WITH NEW WHERE NECESSARY TO ACCOMMODATE NEW LOCATION. SEE PLANS FOR LOCATIONS AND QUANTITIES.	EXISTING TO BE REMOVED, CLEANED AND REINSTALLED.
S	EXISTING CEILING MOUNTED PAGING SPEAKER TO BE REMOVED AND REINSTALLED IN APPROXIMATELY THE SAME LOCATION TO ACCOMMODATE CEILING REMOVAL AND/OR REPLACEMENT. REMOVE, CLEAN AND STORE SPEAKER DURING DEMOLITION. REINSTALL AND RECONNECT EXISTING SPEAKER WHEN NEW CEILING GRID AND TILES ARE INSTALLED. EXTEND EXISTING CABLING WITH NEW WHERE NECESSARY TO ACCOMMODATE NEW LOCATION. SEE PLANS FOR LOCATIONS AND QUANTITIES.	EXISTING TO BE REMOVED, CLEANED AND REINSTALLED.

LICENSED PROFESSIONAL ENGINEER
BRIAN R. KEITH
062-050306
EXPIRES: 30NOV23
STATE OF ILLINOIS
DATE: 2/21/2022

KEITH Engineering Design
www.kedmep.com
707 NE Jefferson Ave
Peoria, IL : 61603
309 / 938-4005 : office
309 / 214-0063 : fax

ROCKFORD PUBLIC SCHOOLS

FEHR GRAHAM
ENGINEERING & ENVIRONMENTAL
230 WOODLAWN AVENUE
AURORA, ILLINOIS 60506

Saavedra Group Architects
504 N CHURCH STREET
ROCKFORD, ILLINOIS 61103

Revisions

No.	Date	
1	3/17/2022	ADDENDUM 1

GUILFORD HIGH SCHOOL
HVAC UPGRADE
ROCKFORD, ILLINOIS

Sheet Title:
ELECTRICAL LUMINAIRE & MATERIAL SCHEDULES

Proj. No.: 2251
Date: 02/21/2022
Drawn: TDC
Approved: BRK
Sheet No.:
E500

ROCKFORD PUBLIC SCHOOLS
IFB No. 22-32 HVAC Upgrades at Guilford H.S.
Pre-Bid Meeting Sign-In Sheet
March 11, 2022 at 10:00 a.m.

ROCKFORD PUBLIC SCHOOLS
WORLD-CLASS EDUCATION FOR ALL CHILDREN

PRE-BID MEETING SIGN-IN SHEET

IFB No. 22-32 HVAC Upgrades at Guilford H.S.

PLEASE WRITE EMAIL ADDRESS SO THAT IT IS LEGIBLE IN ORDER TO RECEIVE ADDENDUM INFORMATION

	Printed Name	Company Name	Company Address	Telephone	E-mail
1	SCOTT JENSEN	ROCKFORD PUBLIC SCHOOLS	5952 28TH AVE. ROCKFORD, IL 61109	815-966-3082	SCOTT.JENSEN@RPS205.com
2	TRACY CAULKINS	KEITH ENGINEERING	707 N.E JEFFERSON, PEORIA, IL 61603	309-938-4005	tracyc@keithmep.com
3	Grant Wood	Keith Engineering	707 N.E. Jefferson, Peoria, IL 61603	309-938-4005	grantw@keithmep.com
4	Vody Hamblen	Lawson/Larson	562 Industrial Dr.	815 633-1773	estimating@lcbuilders.net
5	Judd Gastel	Helm Mechanical	2273 Rt 20 E Freeport	8155093586	jgastel@helmgroup.com
6	Tom Luepkes	Nelson Carlson	1417 22nd St Rockford 61108	815 398-1910	tom1@nelsonpipingco.com
7	GARY DAUB	RSCC	10540 N. Second St, Machesney	815 633-6161	GDAUB@rockfordsystem.com

ROCKFORD PUBLIC SCHOOLS
IFB No. 22-32 HVAC Upgrades at Guilford H.S.
Pre-Bid Meeting Sign-In Sheet
March 11, 2022 at 10:00 a.m.

	Printed Name	Company Name	Company Address	Telephone	E-mail
8					
9	Kevin McKinney	IFS	926 North Shore Lake Bluff	847-708-9153	kmckinney@IFSAm.com
10	Jeff Flanders	McDermaids	Kishwaukee St. Rockford, IL	815-219-2420	mcroof@Mcdermaid roofing.com
11	Kevin Dowling	Spenkmann	1212 Milford Ave " "	8154940373	SPERKER@TDS.NET
12	Tom Lee	stenstrom	2420 20th St Rockford	815-677-5213	TOMLEE@STENSTROM.COM
13	Todd Byxbe	Miller Eng	1616 So. Main St, Rkfd	815-963-4878	TByxbe@Mecogroup.com
14					
15					
16					
17					
18					
19					

HICKMAN
EDGE SYSTEMS

PermaSnap® & PermaSnap® Plus

PRODUCT DATA SPECIFICATIONS

PRODUCT DESCRIPTION

PermaSnap is a three-piece snap-on coping system designed for use on parapet walls. The system is available with standard 20 Ga. galvanized clips, or as PermaSnap Plus, with heavy duty 16 Ga. galvanized clips for enhanced performance. Both PermaSnap products consist of galvanized clips, concealed splices and a snapon coping cap for added installation productivity. In addition, PermaSnap products are compatible with all commercial roofing systems, easy-to-install, and provide excellent wind protection along with a clean professional look.

FEATURES & BENEFITS

- ANSI/SPRI/FM 4435/ES-1 Tested
- Snap-on design eliminates exposed fasteners.
- Concealed 6-inch splices accommodate building expansion and contraction, and eliminate the need for unsightly caulked or taped joints.
- The system includes an internal gutter system to channel water back onto the roof.
- True welded radius, matching corners, end conditions and other accessories are factory fabricated.
- Supplied with 1.5-inch Hickman Universal Fasteners.
- PermaSnap comes with 20 Ga. galvanized clips; PermaSnap Plus comes with heavy duty 16 Ga. galvanized clips for enhanced performance.
- Both products come with a 20 year Excel Warranty for wind speeds up to 110 mph.

APPLICATION

PermaSnap and PermaSnap Plus coping systems are designed for use on parapet walls, and secured in place with Hickman Universal Fasteners (pre-drilling is required on masonry substrates).

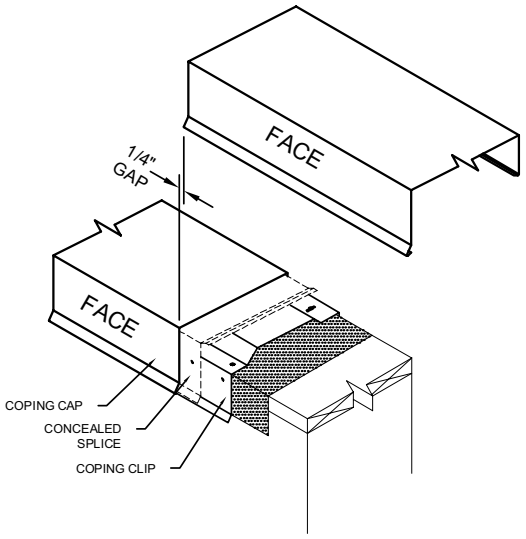

ANSI/SPRI/FM4435/ES-1 TEST PRESSURES UP TO 139 PSF (VERTICAL), AND 82 PSF (HORIZONTAL)

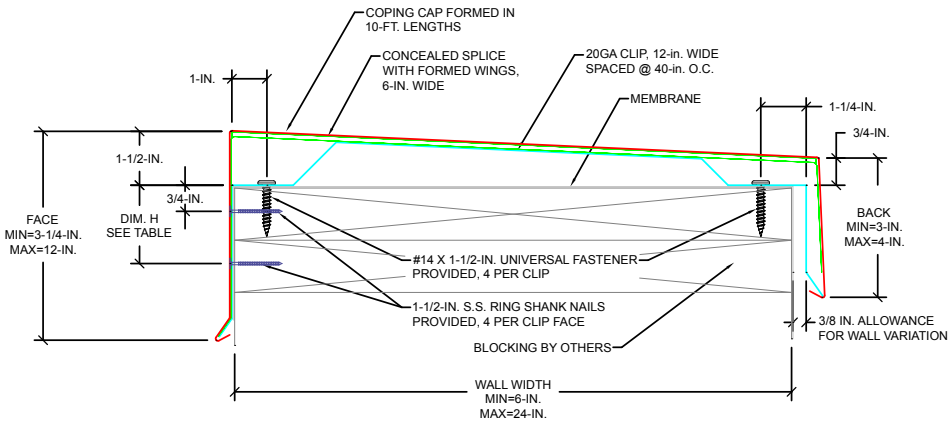

WALL SIZES	FACE HEIGHTS AND BACK LEGS	CAP MATERIALS	CAP GAUGE	FINISHES
PermaSnap 6-in. to 24-in.	Face Heights from 3 ¼- to 12-inches	Galvanized Steel, Aluminum, Stainless Steel	Galvanized steel: 24 or 22 Ga. Aluminum: .040-, .050-, .063- or .080-inches Stainless steel: 24 or 22 Ga.	Mill Finish Manufacturer's Standard Kynar 500® Colors Custom or Exotic Kynar 500® Post-Finished Colors Clear, Bronze, Black Anodized
PermaSnap Plus 6-in. to 32-in.	Back Leg 4-inches (maximum)			

HICKMAN
EDGE SYSTEMS

PermaSnap® & PermaSnap® Plus

INSTALLATION PROCEDURE

SPECIFICATIONS (short form)

The coping cap shall be PermaSnap or PermaSnap Plus coping system as manufactured by Hickman EdgeSystems. The coping cap shall be formed galvanized steel, aluminum or stainless steel with allowance for expansion and contraction. PermaSnap coping is designed for wall widths from 6- to 24-inches. PermaSnap Plus can be used on walls from 6- to 32-inches. All offer face heights from 3.25- to 12-inches. Custom sizes and materials are available by request.

PermaSnap intermittent clips shall be 20 Ga. galvanized steel with pre-slotted fastener holes.

PermaSnap Plus intermittent clips shall be 16 Ga. galvanized steel with pre-slotted fastener holes.

A 6-in. wide concealed splice with an internal metal drainage system shall channel water back to the roof. The concealed splice will be .040-inch aluminum wit the same finish as the coping cap

DESCRIPTION

Application:

The system is a metal snap-on coping with intermittent clips for capping parapet walls. Standard coping is formed from .040-, .050-, .063- or .080-in. aluminum; or 24 or 22 Ga. galvanized steel with Kynar 500® coating, or 24 or 22 Ga. stainless steel. Custom metal is also available by request.

Materials are provided in standard 10-ft. lengths Clips are 20 Ga. or 16 Ga. galvanized steel depending on product ordered. Concealed splices are the same color and finish as the coping cap.

INSTALLATION PROCEDURES

This is a general outline. Refer to our full installation guide for details.

Preparation:

The substrate should be flat and level from front to back. Shim areas not level.

Procedure:

The first clips with attached concealed joint splices should be placed 2-in. from the end of a wall and at the corners. The first 10-ft. clip should be installed with the center line of the clip set to the miter leg length. Follow specific clip center-on-center spacing for straight, radius and vaulted coping lengths per the installation guide.

Install clip sets at all corners and ends first, then work along the wall to the center. Adjust the clip location in the middle of a run to fit a short coping length. This procedure will provide a symmetrical appearance of the installed coping.

Hook the face of the coping cap under the outside face leg of the clips, rotate the coping cap over the top of the clips and snap the back leg by pressing down until the hook snaps into place. Leave a ¼-in. gap at each joint for thermal movement.

FINISHES

- Mill aluminum
- Pre-coat Kynar 500 - from the manufacturer's standard color chart
- Post-coat Kynar 500 - industry standard two coat colors
- Non-standard Kynar 500 - colors requiring multiple coatings or protective clear coats
- Anodized aluminum -clear, bronze and black
- Stainless steel

GUARANTEE

A. Manufacturer's Standard Warranty:

Hickman Inc. warrants that PermaSnap and PermaSnap Plus will not blow off or leak in wind conditions up to 110 miles per hour (3 second maximum peak gust speed) for a period of 20 years from date of shipment. Furthermore, Hickman warrants that the product is free from defects in material and workmanship according to Hickman EdgeSystems' specifications for five years from date of shipment.

PermaSnap and PermaSnap Plus come with a 20-year Excel Warranty for wind speeds up to 110 mph.

Decorative Finish Warranty

- 30 year, pre-finished Kynar 500 warranty
- 20 year, post-finished Kynar 500 warranty

QUALITY ASSURANCE

The PermaSnap and PermaSnap Plus coping systems have been tested simultaneously on the horizontal and vertical surfaces in accordance with ANSI/SPRI/FM 4435/ES-1 SPRI Test Method RE-3 for coping.

TECHNICAL SERVICES

Shop drawings are available from the factory. Product samples, detail sheets, color chips and color charts are available for your submittal package. CSI 3-Part specifications and CAD/BIM details are available on our website. For personal assistance with questions or submittals, contact your local Hickman Edge Systems representative.

HICKMAN
EDGE SYSTEMS

4 Commerce Way | Arden, NC 28704
(800) 892-9173 | (828) 676-1700 | Hickmanedgesystems.com
Copyright ©2021. All rights reserved.

Superior productivity.
Superior performance.

EM1120 Rev. 02152021